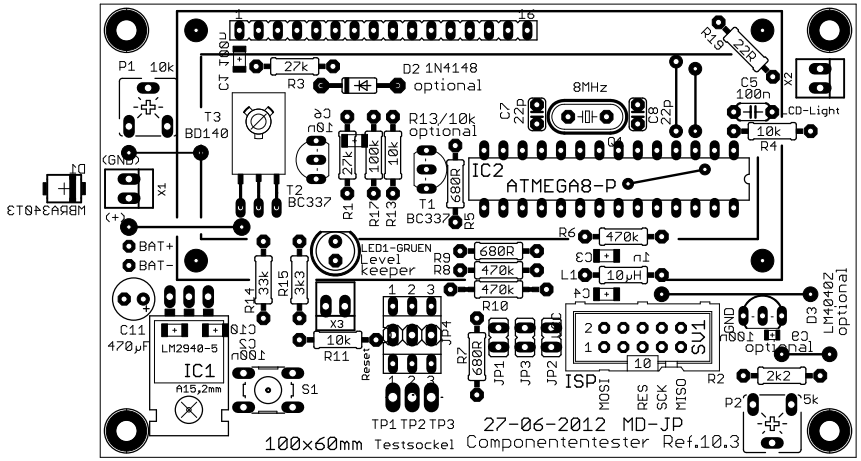
P1 10k
C7 100u
27k
R3
D2 1N4148
optional
T3
BD140
C6
10µ
R13/10k
optional
C7
22p
8MHz
C8
22p
R19
22R
C5
100n
X2
LCD-Light
10k
R4
(GND)
X1
(+)
BAT+
BAT-
C2
MBRA340T3
T2
BC337
R11
27k
R12
100k
R13
10k
T1
BC337
680R
R5
IC2
ATMEGA8-P
R6
470k
C3
1µ
L1
10µH
C4
LED1-GRUEN
Level
keeper
R9
680R
R8
470k
470k
R10
R14
33k
R15
3k3
X3
10k
R11
Reset
JP4
R7
680R
JP1
JP3
JP2
SV1
ISP
MOSI
RES
SCK
MISO
GND
C9
100n
optional
D3
LM4040Z
optional
R2
2k2
P2
5k
C11
470µF
LM2940-5
IC1
A15,2mm
C10
100n
S1
TP1 TP2 TP3
Testsockel
27-06-2012 MD-JP
100x60mm
Componententester Ref.10.3