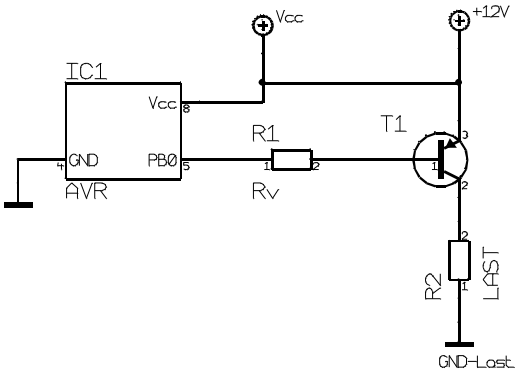
Vcc
+12V
IC1
Vcc
8
GND
PB0
5
AVR
R1
Rv
T1
R2
LAST
GND-Last