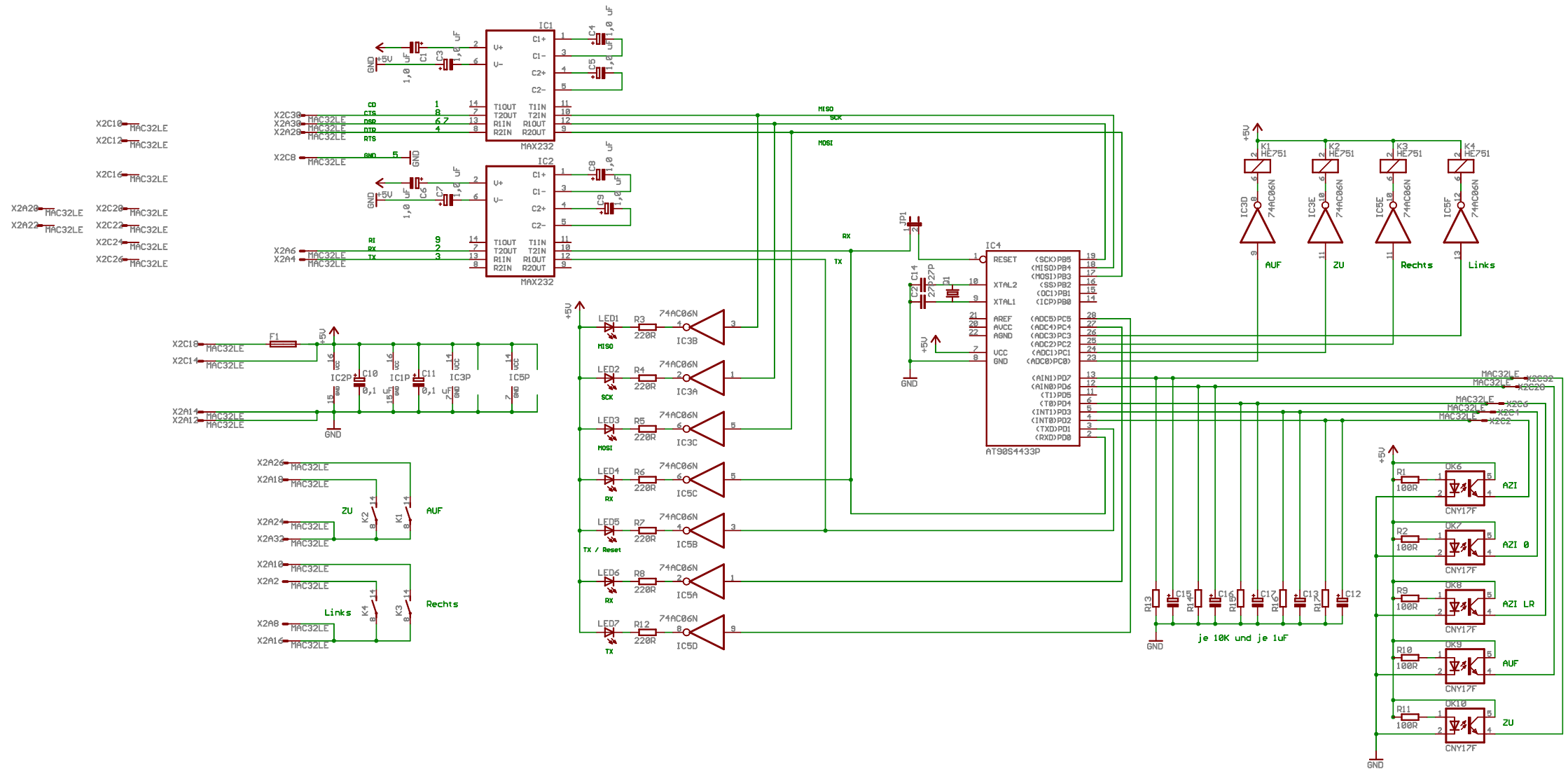
IC1
MAX232
IC2
MAX232
IC4
AT90S4433P
MISO
SCK
MOSI
RX
TX
K1 HE751
K2 HE751
K3 HE751
K4 HE751
IC3D 74AC06N
IC3E 74AC06N
IC5E 74AC06N
IC5F 74AC06N
AUF
ZU
Rechts
Links
LED1 R3 220R 74AC06N IC3B
LED2 R4 220R 74AC06N IC3A
LED3 R5 220R 74AC06N IC3C
LED4 R6 220R 74AC06N IC5C
LED5 R7 220R 74AC06N IC5B
LED6 R8 220R 74AC06N IC5A
LED7 R12 220R 74AC06N IC5D
IC2P IC1P IC3P IC5P
F1
je 10K und je 1uF
OK6 CNY17F AZI
OK7 CNY17F AZI 0
OK8 CNY17F AZI LR
OK9 CNY17F AUF
OK10 CNY17F ZU
MAC32LE
GND
+5V