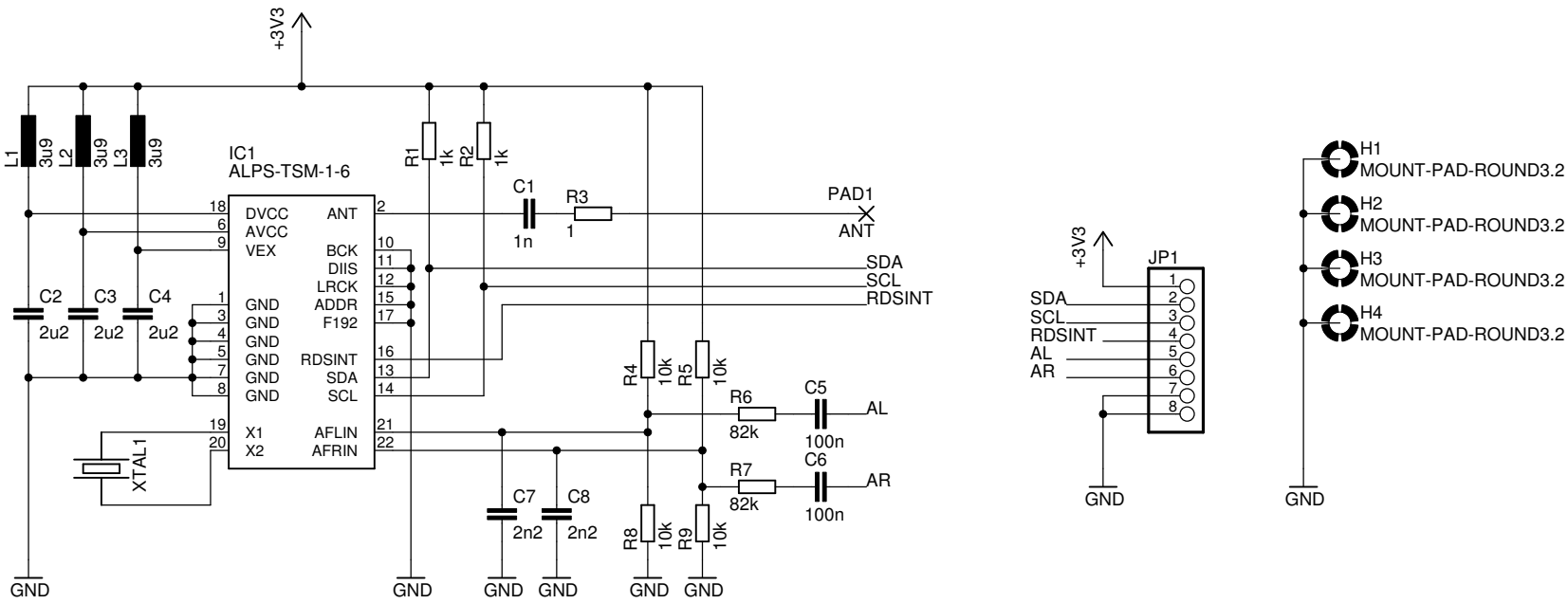


| | |
|---|---|
| TITLE: tsm1-6_test | |
| Document Number: | REV: |
| Date: 15.04.12 19:29 | Sheet: 1/1 |