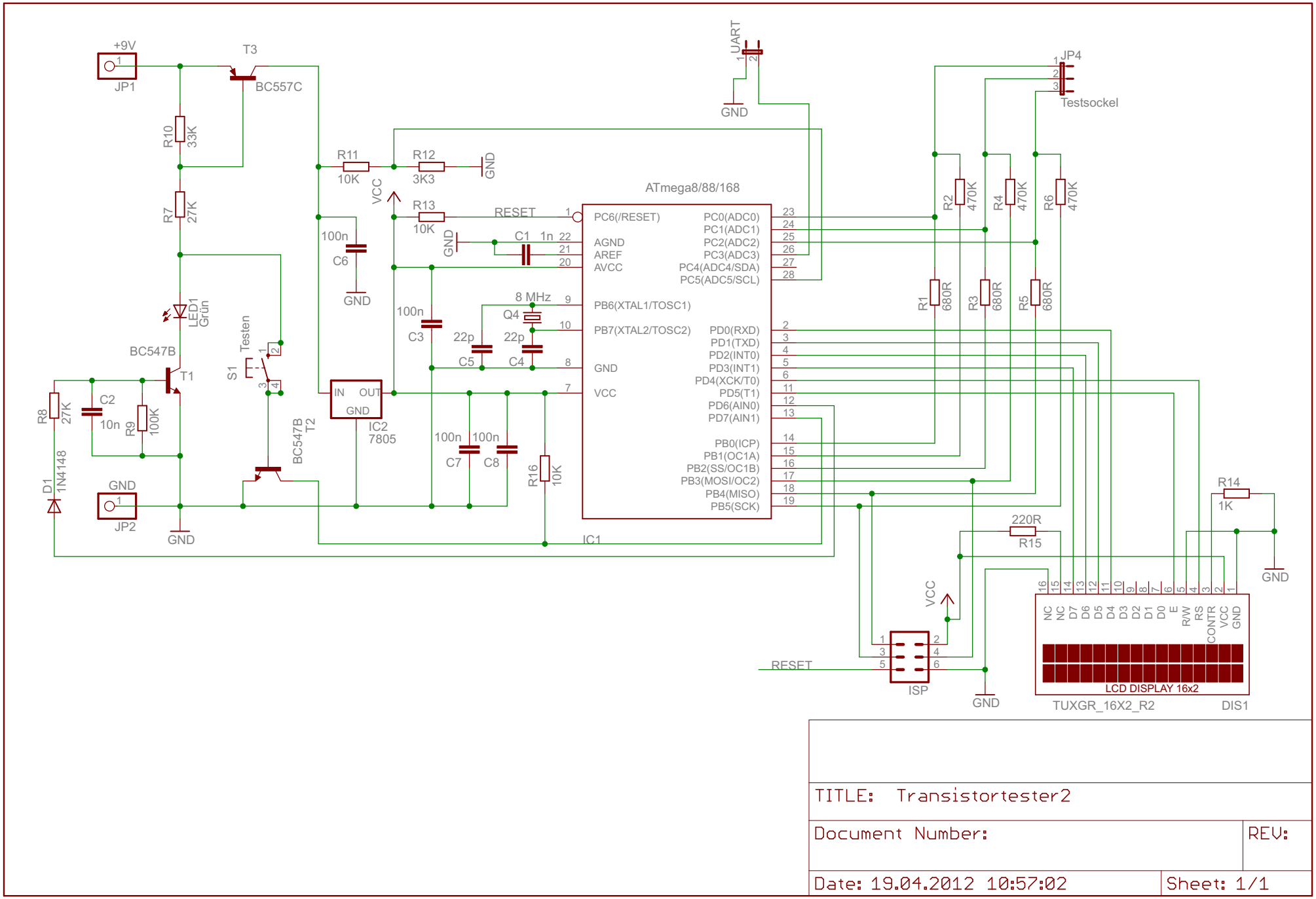

TITLE: Transistortester2

Document Number:

REV:

Date: 19.04.2012 10:57:02

Sheet: 1/1

19.04.2012 17:38:21 C:\Users\kub\Documents\eagle\Trasistortester2\Transistortester2.sch (Sheet: 1/1)