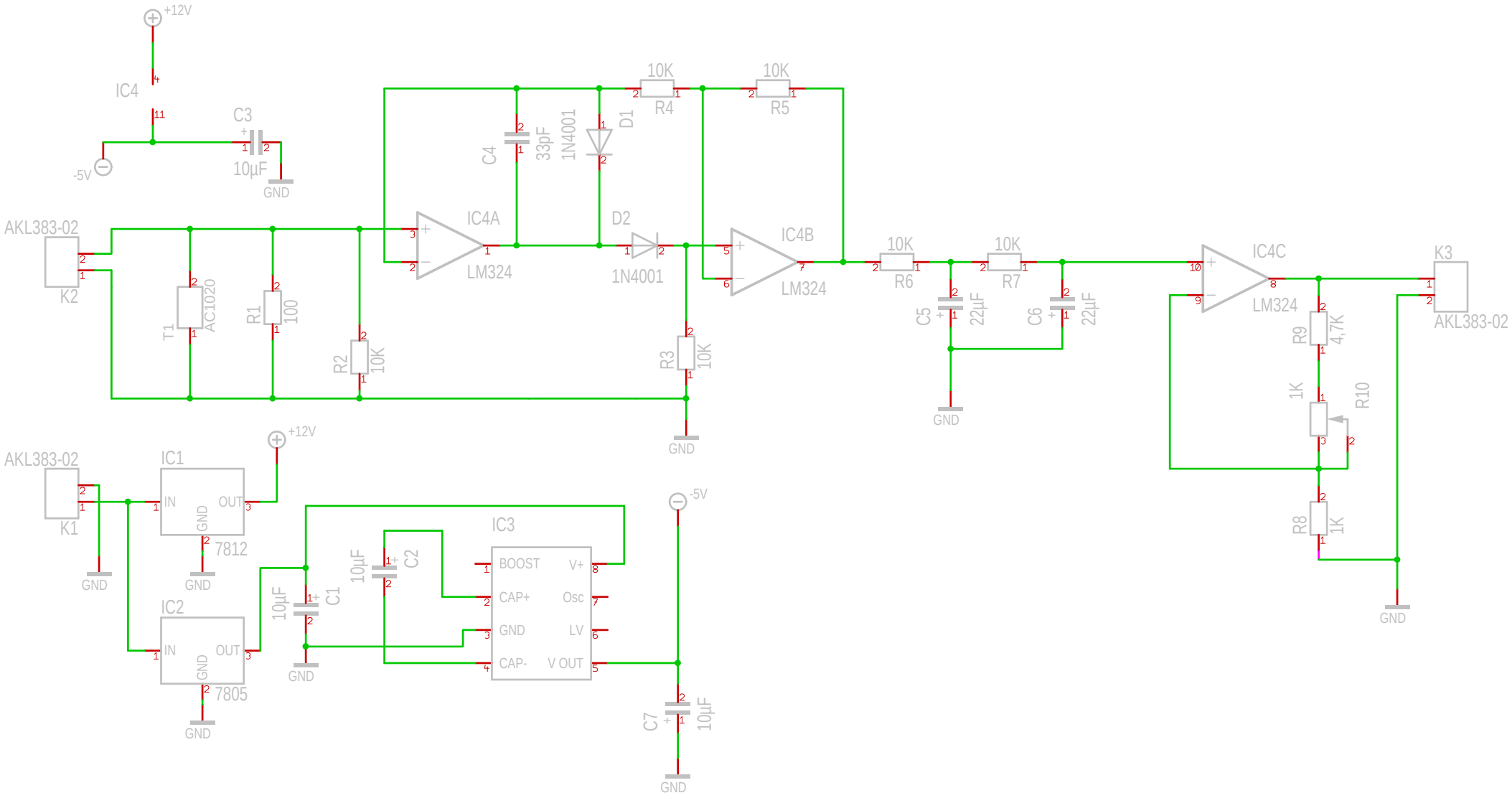
+12V
IC4
-5V
C3
10µF
GND
AKL383-02
K2
T1
AC1020
R1
100
R2
10K
IC4A
LM324
C4
33pF
1N4001
D1
D2
1N4001
10K
R4
10K
R5
IC4B
LM324
R3
10K
GND
10K
R6
10K
R7
C5
22µF
C6
22µF
GND
IC4C
LM324
R9
4,7K
1K
R10
R8
1K
K3
AKL383-02
GND
AKL383-02
K1
IC1
IN
OUT
GND
7812
GND
+12V
IC2
IN
OUT
GND
7805
GND
10µF
C1
GND
10µF
C2
IC3
BOOST
CAP+
GND
CAP-
V+
Osc
LV
V OUT
-5V
C7
10µF
GND