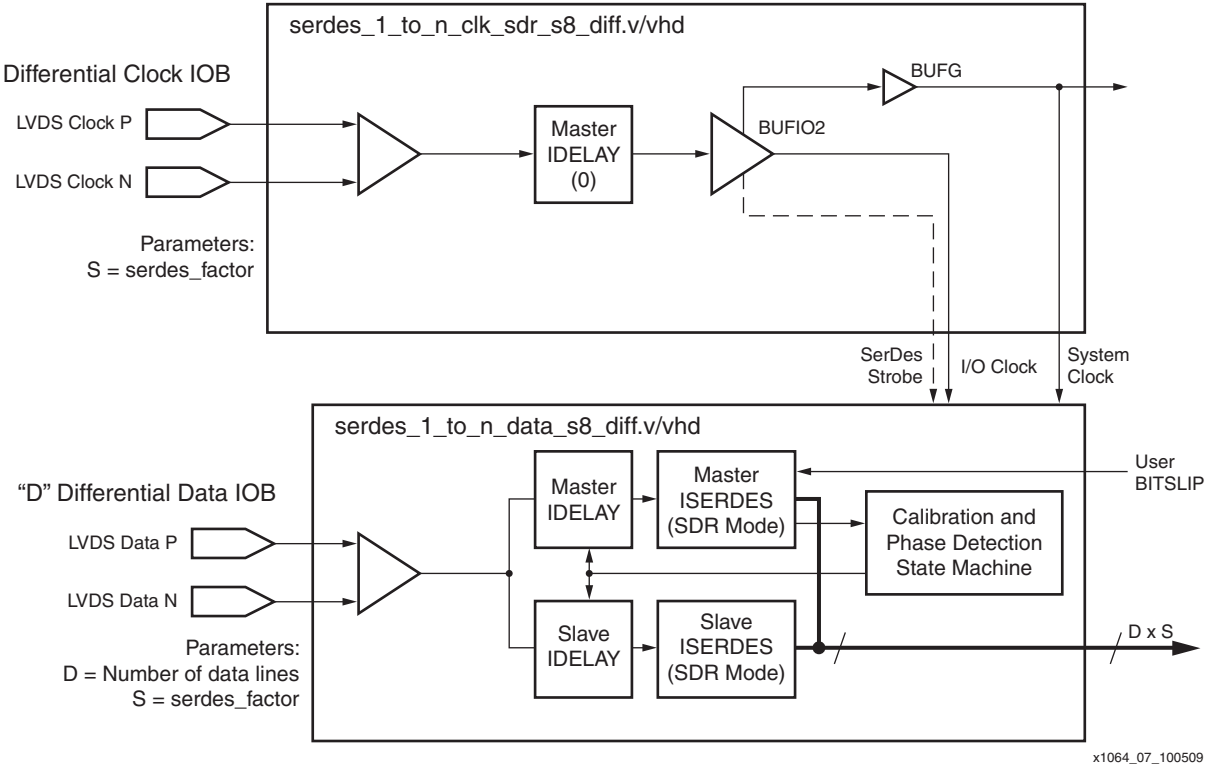


*Figure 7:* **SDR Data Reception Using BUFIO2**