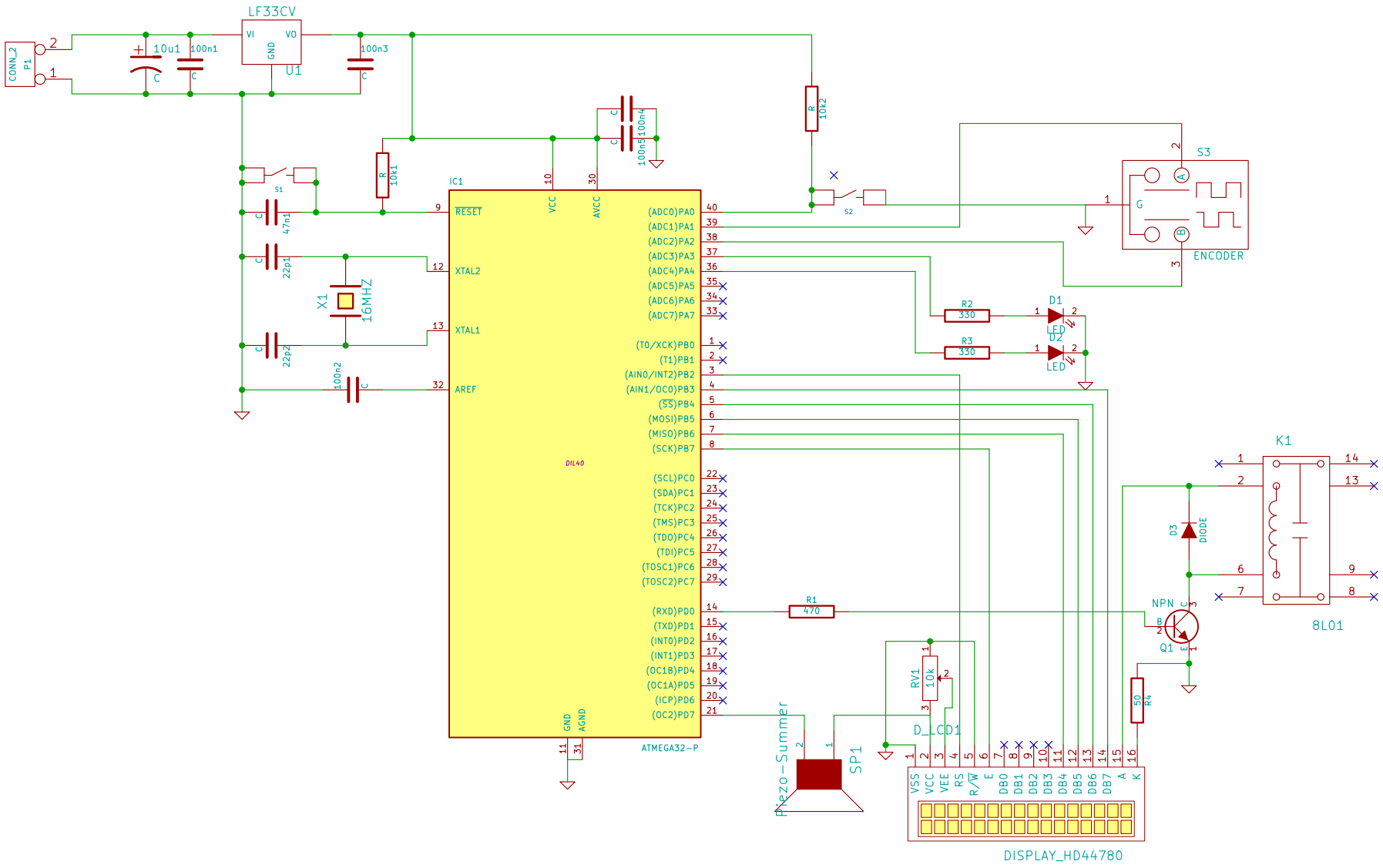
LF33CV
VI
VO
GND
U1
CONN_2
P1
10u1
100n1
100n3
100n4
100n5
10k1
10k2
S1
S2
S3
ENCODER
IC1
RESET
VCC
AVCC
XTAL2
XTAL1
AREF
47n1
22p1
22p2
100n2
X1
16MHZ
DIL40
ATMEGA32-P
(ADC0)PA0
(ADC1)PA1
(ADC2)PA2
(ADC3)PA3
(ADC4)PA4
(ADC5)PA5
(ADC6)PA6
(ADC7)PA7
(T0/XCK)PB0
(T1)PB1
(AIN0/INT2)PB2
(AIN1/OC0)PB3
(SS)PB4
(MOSI)PB5
(MISO)PB6
(SCK)PB7
(SCL)PC0
(SDA)PC1
(TCK)PC2
(TMS)PC3
(TDO)PC4
(TDI)PC5
(TOSC1)PC6
(TOSC2)PC7
(RXD)PD0
(TXD)PD1
(INT0)PD2
(INT1)PD3
(OC1B)PD4
(OC1A)PD5
(ICP)PD6
(OC2)PD7
GND
AGND
R2
330
R3
330
D1
LED
D2
LED
R1
470
RV1
10k
D_LCD1
VSS
VCC
VEE
RS
R/W
E
DB0
DB1
DB2
DB3
DB4
DB5
DB6
DB7
A
K
DISPLAY_HD44780
Piezo-Summer
SP1
K1
8L01
D3
DIODE
NPN
Q1
R4
50