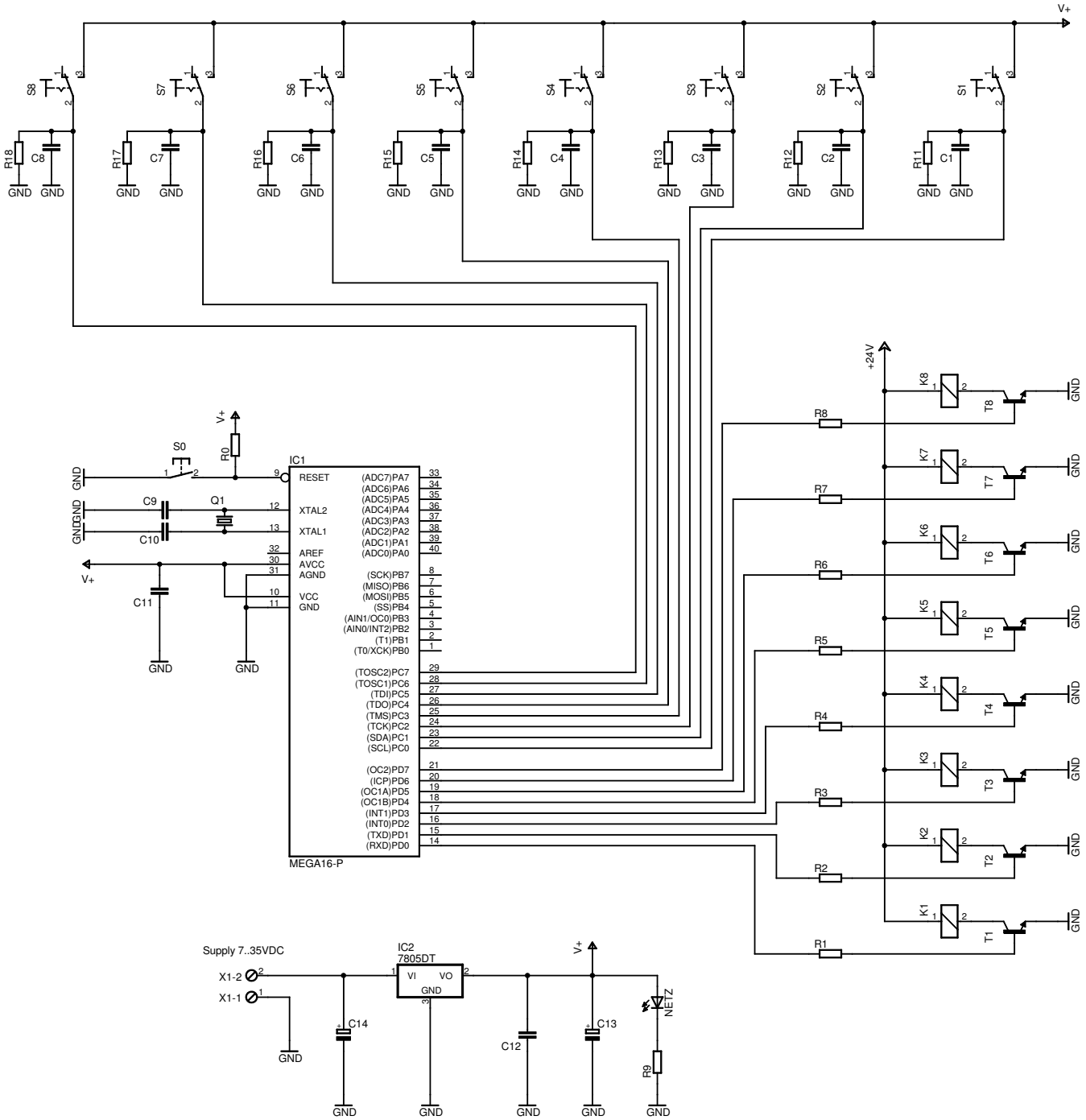
V+
S8
S7
S6
S5
S4
S3
S2
S1
R18
C8
R17
C7
R16
C6
R15
C5
R14
C4
R13
C3
R12
C2
R11
C1
GND
+24V
K8
K7
K6
K5
K4
K3
K2
K1
T8
T7
T6
T5
T4
T3
T2
T1
R8
R7
R6
R5
R4
R3
R2
R1
S0
R0
IC1
C9
C10
Q1
C11
RESET
XTAL2
XTAL1
AREF
AVCC
AGND
VCC
(ADC7)PA7
(ADC6)PA6
(ADC5)PA5
(ADC4)PA4
(ADC3)PA3
(ADC2)PA2
(ADC1)PA1
(ADC0)PA0
(SCK)PB7
(MISO)PB6
(MOSI)PB5
(SS)PB4
(AIN1/OC0)PB3
(AIN0/INT2)PB2
(T1)PB1
(T0/XCK)PB0
(TOSC2)PC7
(TOSC1)PC6
(TDI)PC5
(TDO)PC4
(TMS)PC3
(TCK)PC2
(SDA)PC1
(SCL)PC0
(OC2)PD7
(ICP)PD6
(OC1A)PD5
(OC1B)PD4
(INT1)PD3
(INT0)PD2
(TXD)PD1
(RXD)PD0
MEGA16-P
Supply 7..35VDC
X1-2
X1-1
IC2
7805DT
VI
VO
C14
C12
C13
NETZ
R9