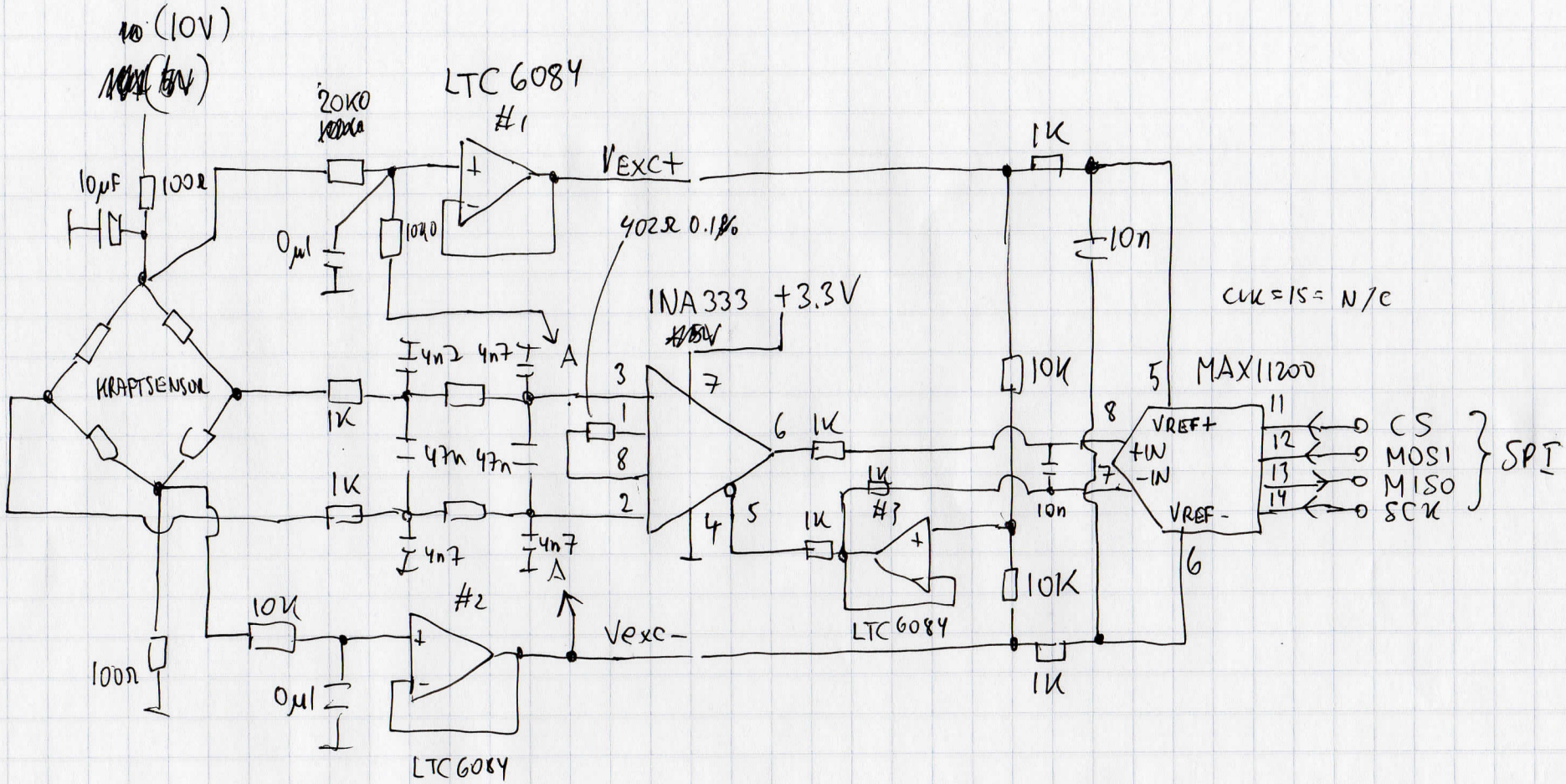

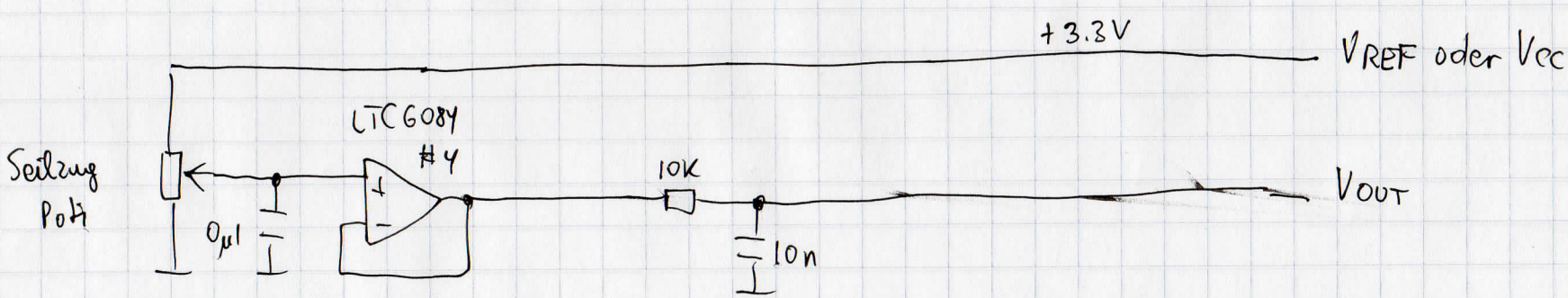

Suggested
Sensor Frontend
2015/06/05 G70