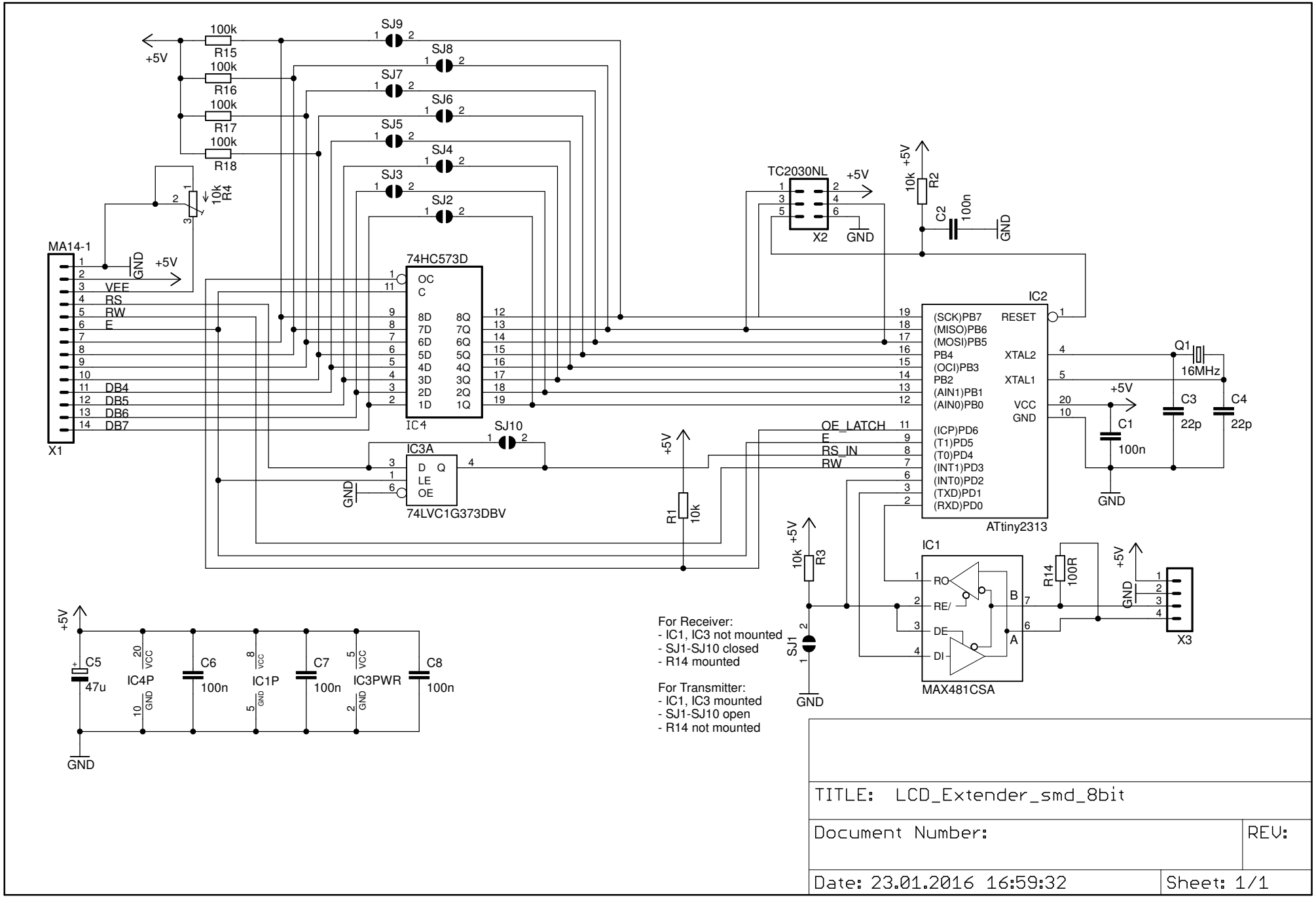

TITLE: LCD_Extender_smd_8bit

Document Number:

REV:

Date: 23.01.2016 16:59:32

Sheet: 1/1