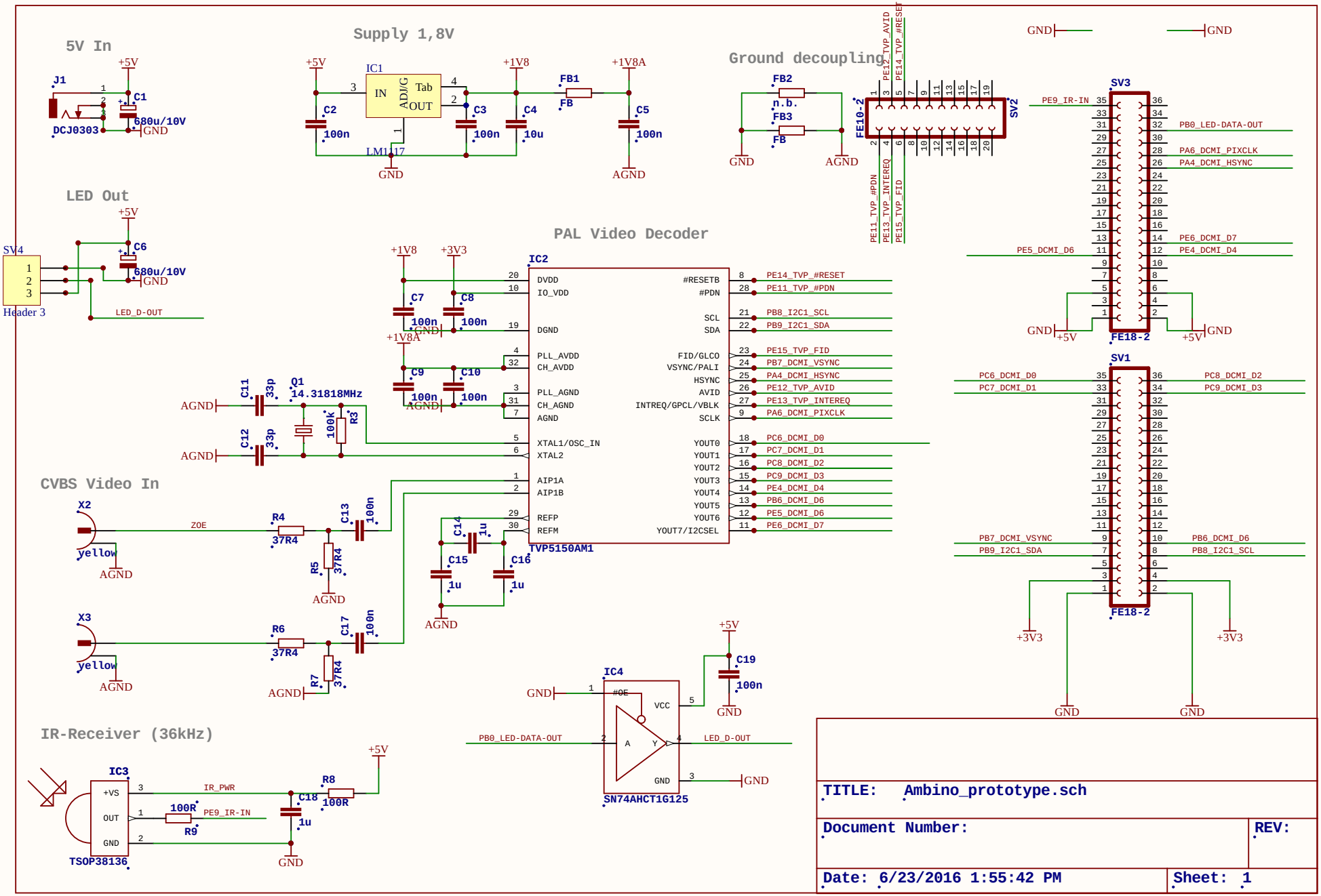
5V In
J1
DCJ0303
C1
680u/10V
+5V
GND
Supply 1,8V
IC1
IN
ADJ/G
Tab
OUT
LM1117
C2
100n
C3
100n
C4
10u
C5
100n
+1V8
+1V8A
FB1
FB
AGND
Ground decoupling
FB2
n.b.
FB3
FB
FE10-2
SV2
PE12_TVP_AVID
PE14_TVP_#RESET
PE11_TVP_#PDN
PE13_TVP_INTEREQ
PE15_TVP_FID
SV3
FE18-2
PE9_IR-IN
PB0_LED-DATA-OUT
PA6_DCMI_PIXCLK
PA4_DCMI_HSYNC
PE6_DCMI_D7
PE5_DCMI_D6
PE4_DCMI_D4
+5V
LED Out
SV4
Header 3
C6
680u/10V
LED_D-OUT
PAL Video Decoder
IC2
TVP5150AM1
+1V8
+3V3
C7
100n
C8
100n
C9
100n
C10
100n
DVDD
IO_VDD
DGND
PLL_AVDD
CH_AVDD
PLL_AGND
CH_AGND
AGND
XTAL1/OSC_IN
XTAL2
AIP1A
AIP1B
REFP
REFM
#RESETB
#PDN
SCL
SDA
FID/GLCO
VSYNC/PALI
HSYNC
AVID
INTREQ/GPCL/VBLK
SCLK
YOUT0
YOUT1
YOUT2
YOUT3
YOUT4
YOUT5
YOUT6
YOUT7/I2CSEL
PE14_TVP_#RESET
PE11_TVP_#PDN
PB8_I2C1_SCL
PB9_I2C1_SDA
PE15_TVP_FID
PB7_DCMI_VSYNC
PA4_DCMI_HSYNC
PE12_TVP_AVID
PE13_TVP_INTEREQ
PA6_DCMI_PIXCLK
PC6_DCMI_D0
PC7_DCMI_D1
PC8_DCMI_D2
PC9_DCMI_D3
PE4_DCMI_D4
PB6_DCMI_D6
PE5_DCMI_D6
PE6_DCMI_D7
C11
33p
C12
33p
Q1
14.31818MHz
100k
R3
C14
1u
C15
1u
C16
1u
SV1
FE18-2
PC6_DCMI_D0
PC7_DCMI_D1
PC8_DCMI_D2
PC9_DCMI_D3
PB7_DCMI_VSYNC
PB9_I2C1_SDA
PB6_DCMI_D6
PB8_I2C1_SCL
+3V3
CVBS Video In
X2
yellow
ZOE
R4
37R4
C13
100n
R5
37R4
X3
yellow
R6
37R4
C17
100n
R7
37R4
IR-Receiver (36kHz)
IC3
TSOP38136
+VS
OUT
GND
IR_PWR
PE9_IR-IN
100R
R9
R8
100R
C18
1u
IC4
SN74AHCT1G125
#OE
VCC
A
Y
GND
PB0_LED-DATA-OUT
LED_D-OUT
C19
100n
TITLE: Ambino_prototype.sch
Document Number:
REV:
Date: 6/23/2016 1:55:42 PM
Sheet: 1