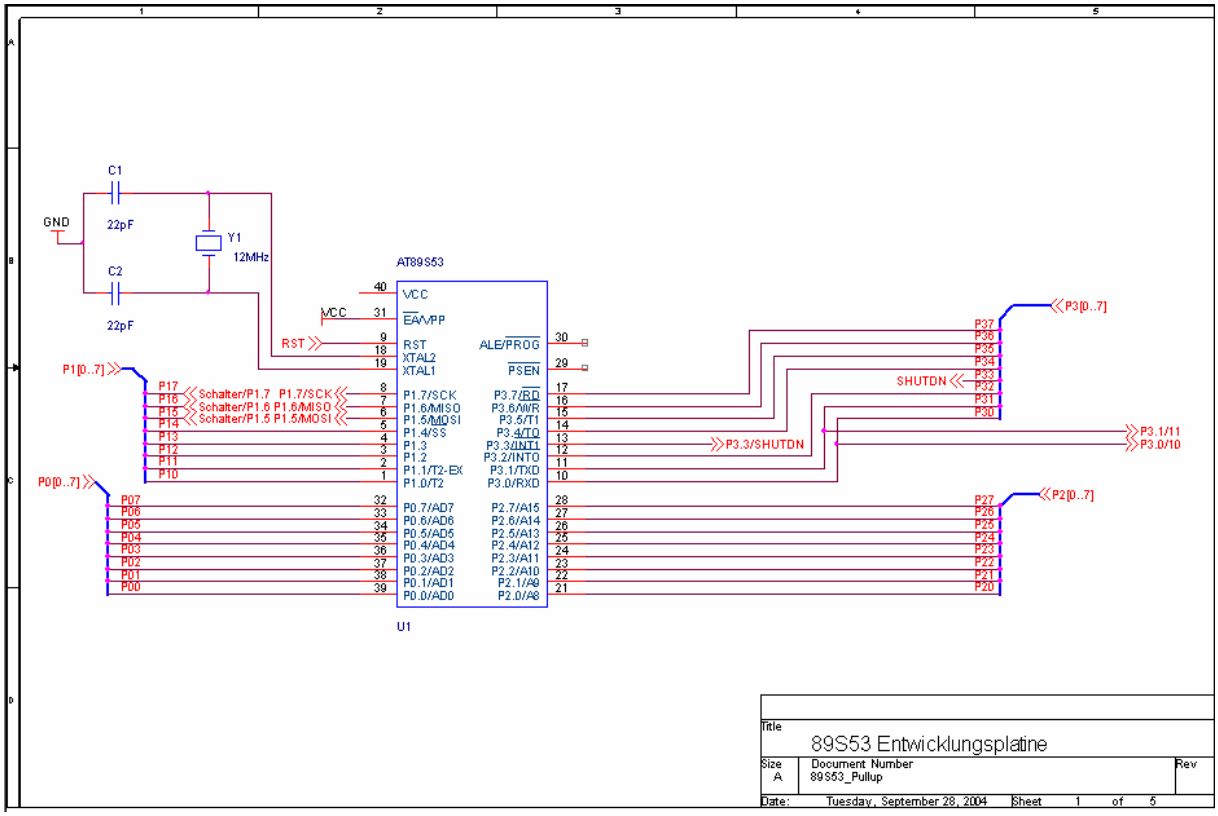
C1
22pF
GND
Y1
12MHz
C2
22pF
AT89S53
VCC
EA/VPP
RST
XTAL2
XTAL1
ALE/PROG
PSEN
P1.7/SCK
P1.6/MISO
P1.5/MOSI
P1.4/SS
P1.3
P1.2
P1.1/T2-EX
P1.0/T2
P3.7/RD
P3.6/WR
P3.5/T1
P3.4/T0
P3.3/INT1
P3.2/INT0
P3.1/TXD
P3.0/RXD
P0.7/AD7
P0.6/AD6
P0.5/AD5
P0.4/AD4
P0.3/AD3
P0.2/AD2
P0.1/AD1
P0.0/AD0
P2.7/A15
P2.6/A14
P2.5/A13
P2.4/A12
P2.3/A11
P2.2/A10
P2.1/A9
P2.0/A8
U1
P1[0..7]
P0[0..7]
P3[0..7]
P2[0..7]
Schalter/P1.7 P1.7/SCK
Schalter/P1.6 P1.6/MISO
Schalter/P1.5 P1.5/MOSI
SHUTDN
P3.3/SHUTDN
P3.1/11
P3.0/10
Title
89S53 Entwicklungsplatine
Size A
Document Number
89S53_Pullup
Rev
Date: Tuesday, September 28, 2004
Sheet 1 of 5

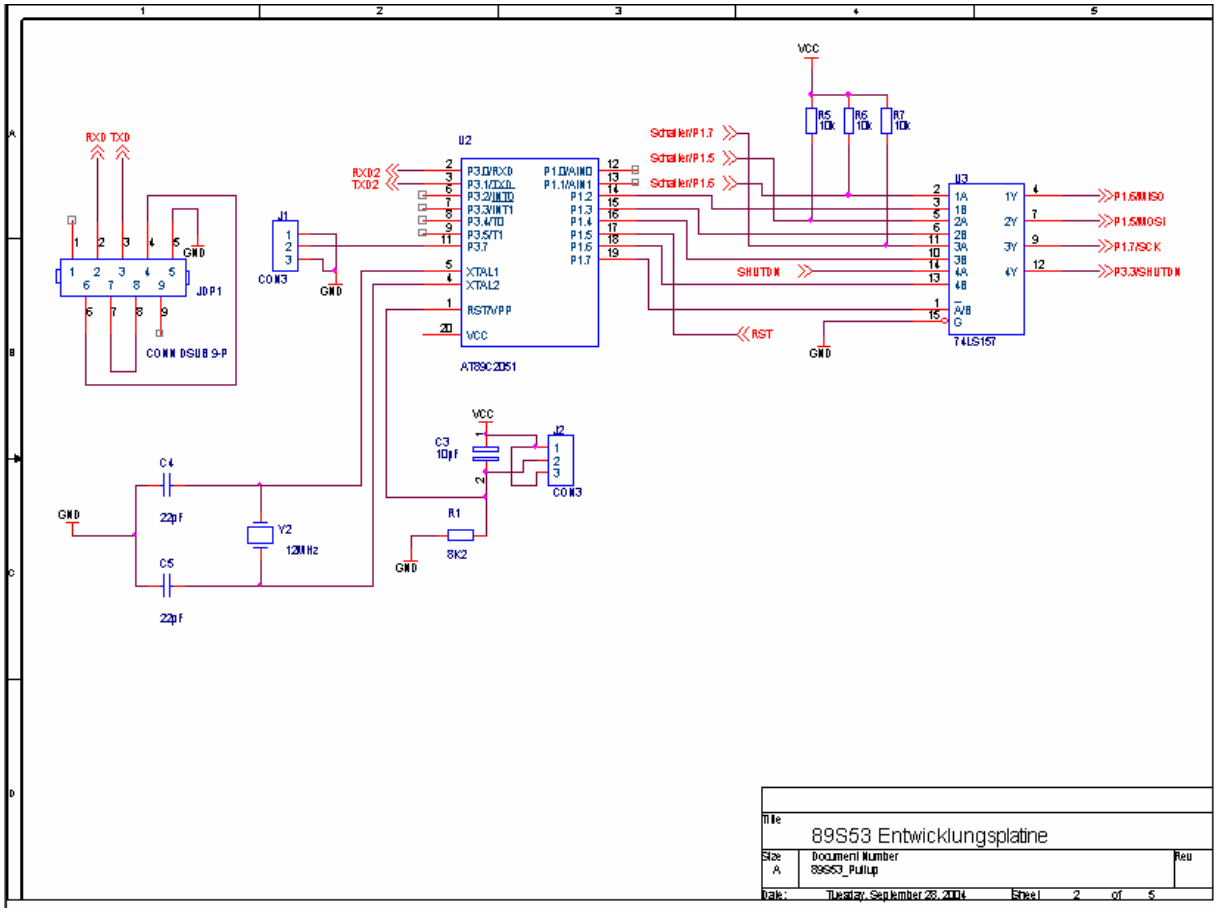
RXD TXD
GND
JDP1
CONN DSUB 9-P
J1
CON3
GND
U2
RXD2
TXD2
P3.0/RXD
P3.1/TXD
P3.2/INT0
P3.3/INT1
P3.4/T0
P3.5/T1
P3.7
XTAL1
XTAL2
RST/VPP
VCC
P1.0/AIN0
P1.1/AIN1
P1.2
P1.3
P1.4
P1.5
P1.6
P1.7
AT89C2051
VCC
C3
10µF
J2
CON3
C4
22pF
GND
Y2
12MHz
C5
22pF
R1
8K2
GND
Schalter/P1.7
Schalter/P1.5
Schalter/P1.6
R5
10k
R6
10k
R7
10k
SHUTDN
RST
U3
1A
1B
2A
2B
3A
3B
4A
4B
A/B
G
1Y
2Y
3Y
4Y
74LS157
GND
P1.6/MISO
P1.5/MOSI
P1.7/SCK
P3.3/SHUTDN
Title
89S53 Entwicklungsplatine
Size A
Document Number
89S53_Pullup
Rev
Date: Tuesday, September 28, 2004
Sheet 2 of 5

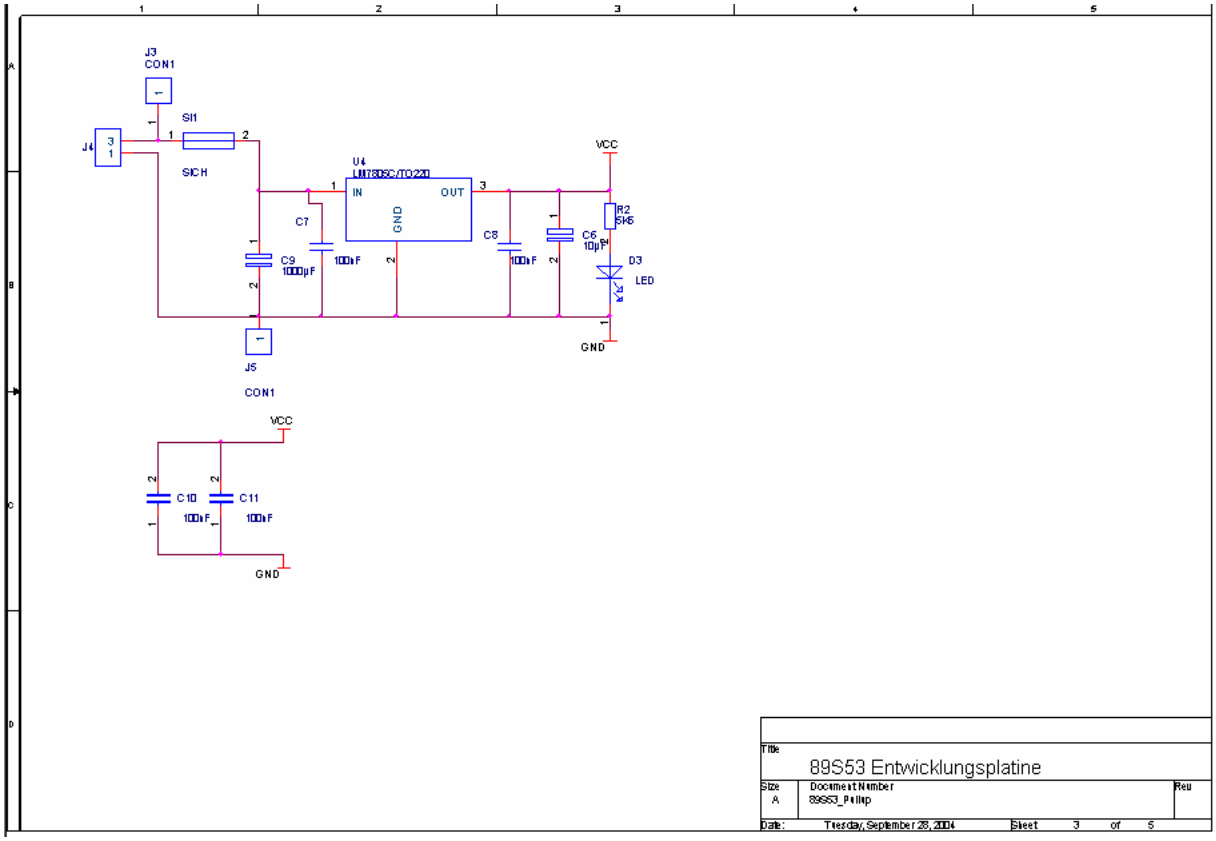
J3
CON1
SI1
SICH
J4
U4
LM78SC/TO-220
IN
OUT
GND
C7
100nF
C9
1000µF
C8
100nF
C6
10µF
R2
5K6
D3
LED
VCC
GND
J5
CON1
C10
100nF
C11
100nF
Title
89S53 Entwicklungsplatine
Size
A
Document Number
89S53_Pullup
Rev
Date:
Tuesday, September 28, 2004
Sheet
3
of
5

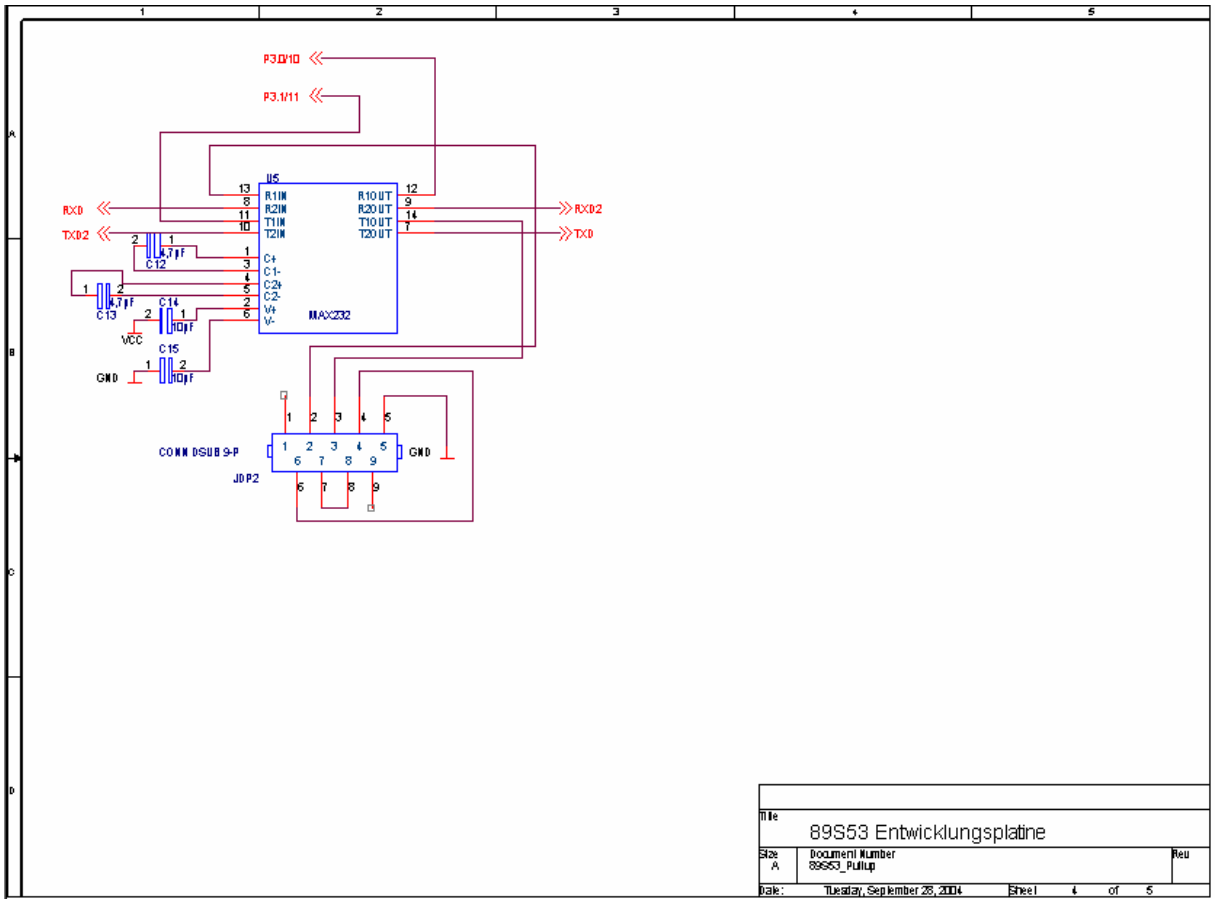
P3.0/10
P3.1/11
U5
R1IN
R2IN
T1IN
T2IN
R1OUT
R2OUT
T1OUT
T2OUT
C+
C1-
C2+
C2-
V+
V-
MAX232
RXD
TXD2
RXD2
TXD
C12
4.7µF
C13
4.7µF
C14
10µF
C15
10µF
VCC
GND
CONN DSUB 9-P
JDP2
Title
89S53 Entwicklungsplatine
Size
A
Document Number
89S53_Pullup
Rev
Date:
Tuesday, September 28, 2004
Sheet
4
of
5

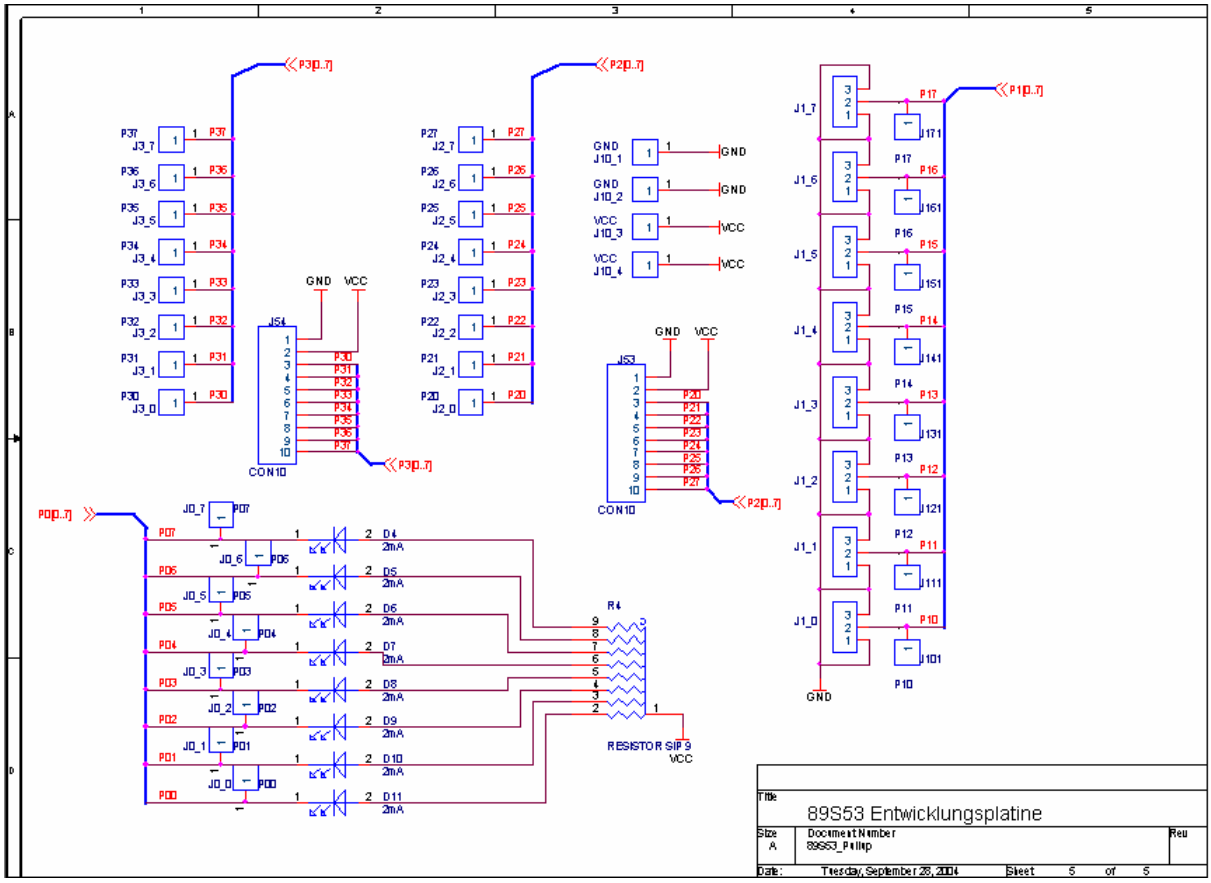
P3[0..7]
P2[0..7]
P1[0..7]
P0[0..7]
GND
VCC
CON10
RESISTOR SIP 9
Title
89S53 Entwicklungsplatine
Size
A
Document Number
89S53_Philip
Rev
Date:
Tuesday, September 28, 2004
Sheet
5
of
5