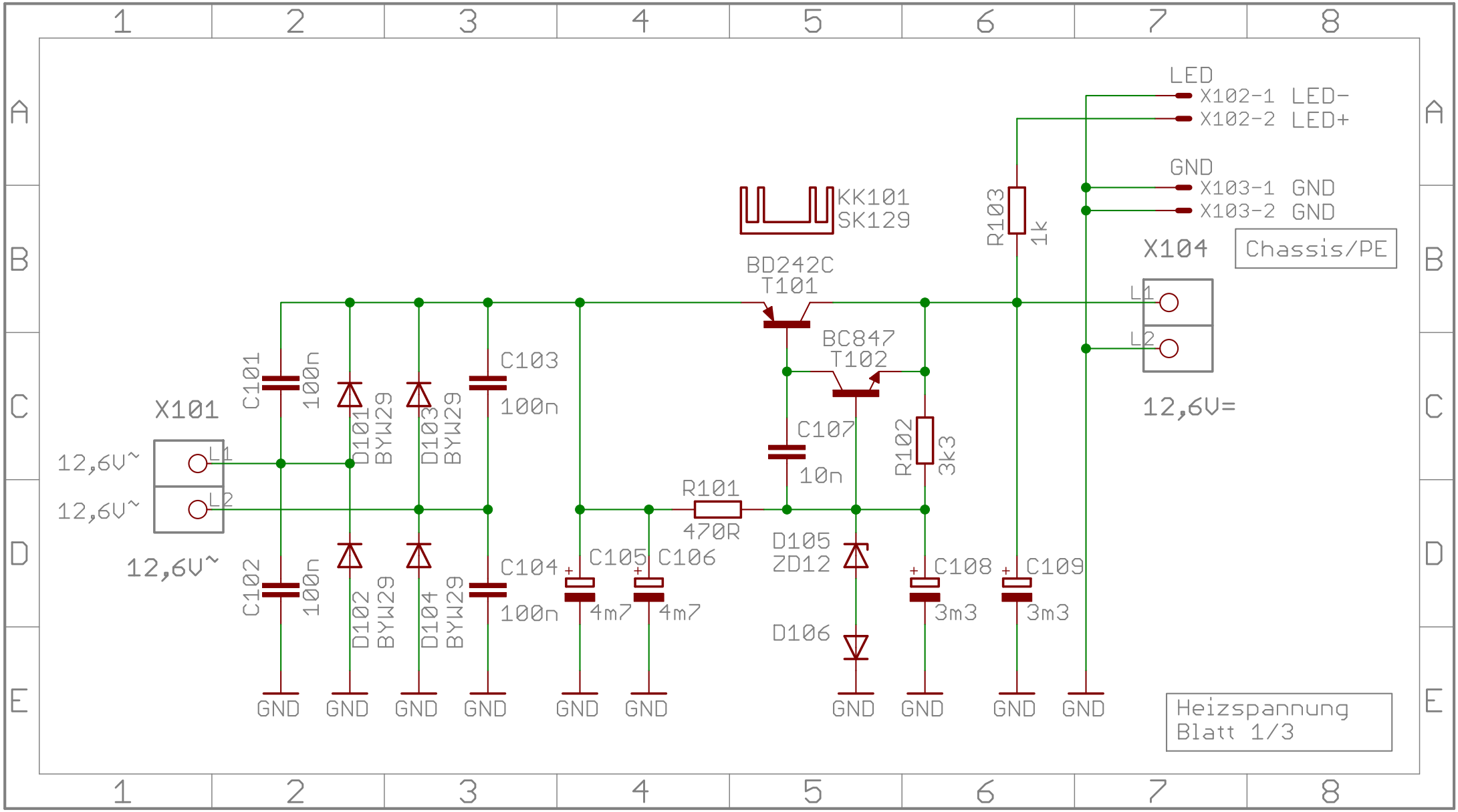
LED
X102-1 LED-
X102-2 LED+
GND
X103-1 GND
X103-2 GND
X104
Chassis/PE
L1
L2
12,6V=
KK101
SK129
R103
1k
BD242C
T101
BC847
T102
C101
100n
C103
100n
X101
12,6V~
L1
12,6V~
L2
12,6V~
D101
BYW29
D103
BYW29
C107
10n
R102
3k3
R101
470R
D105
ZD12
C102
100n
D102
BYW29
D104
BYW29
C104
100n
C105
4m7
C106
4m7
C108
3m3
C109
3m3
D106
GND
GND
GND
GND
GND
GND
GND
GND
GND
GND
Heizspannung
Blatt 1/3

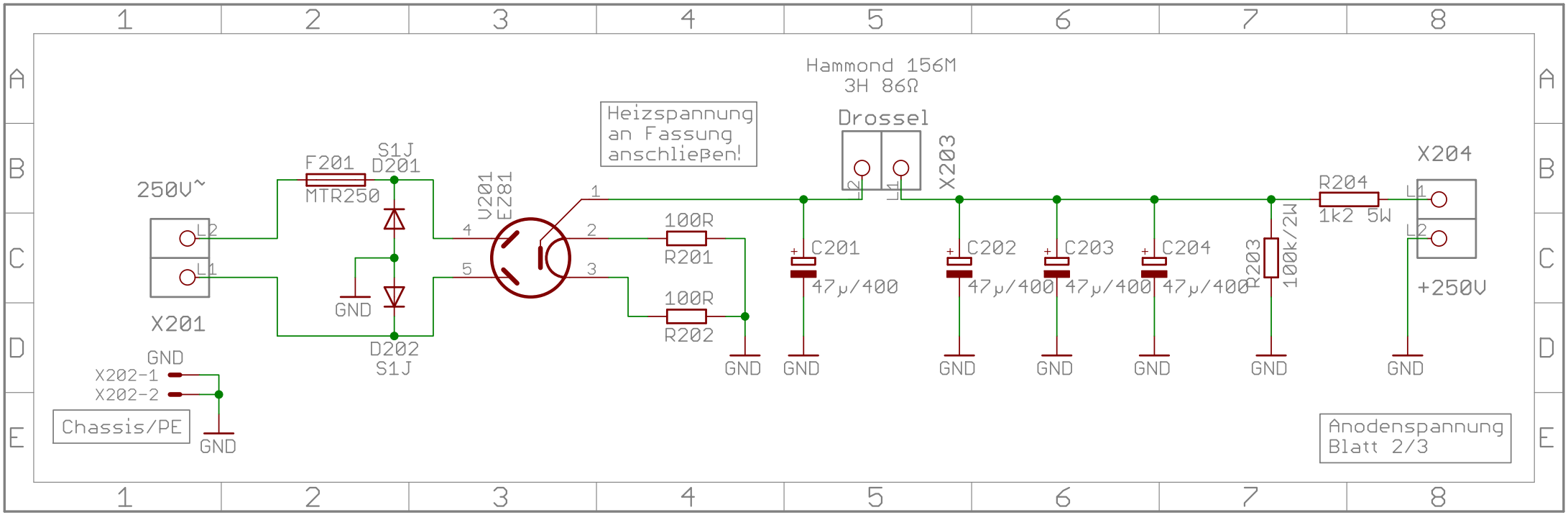
Hammond 156M
3H 86Ω
Drossel
X203
Heizspannung
an Fassung
anschließen!
250V~
X201
L2
L1
F201
MTR250
S1J
D201
D202
S1J
GND
V201
EZ81
1
2
3
4
5
100R
R201
100R
R202
C201
47µ/400
C202
47µ/400
C203
47µ/400
C204
47µ/400
R203
100k/2W
R204
1k2 5W
X204
+250V
GND
X202-1
X202-2
Chassis/PE
Anodenspannung
Blatt 2/3

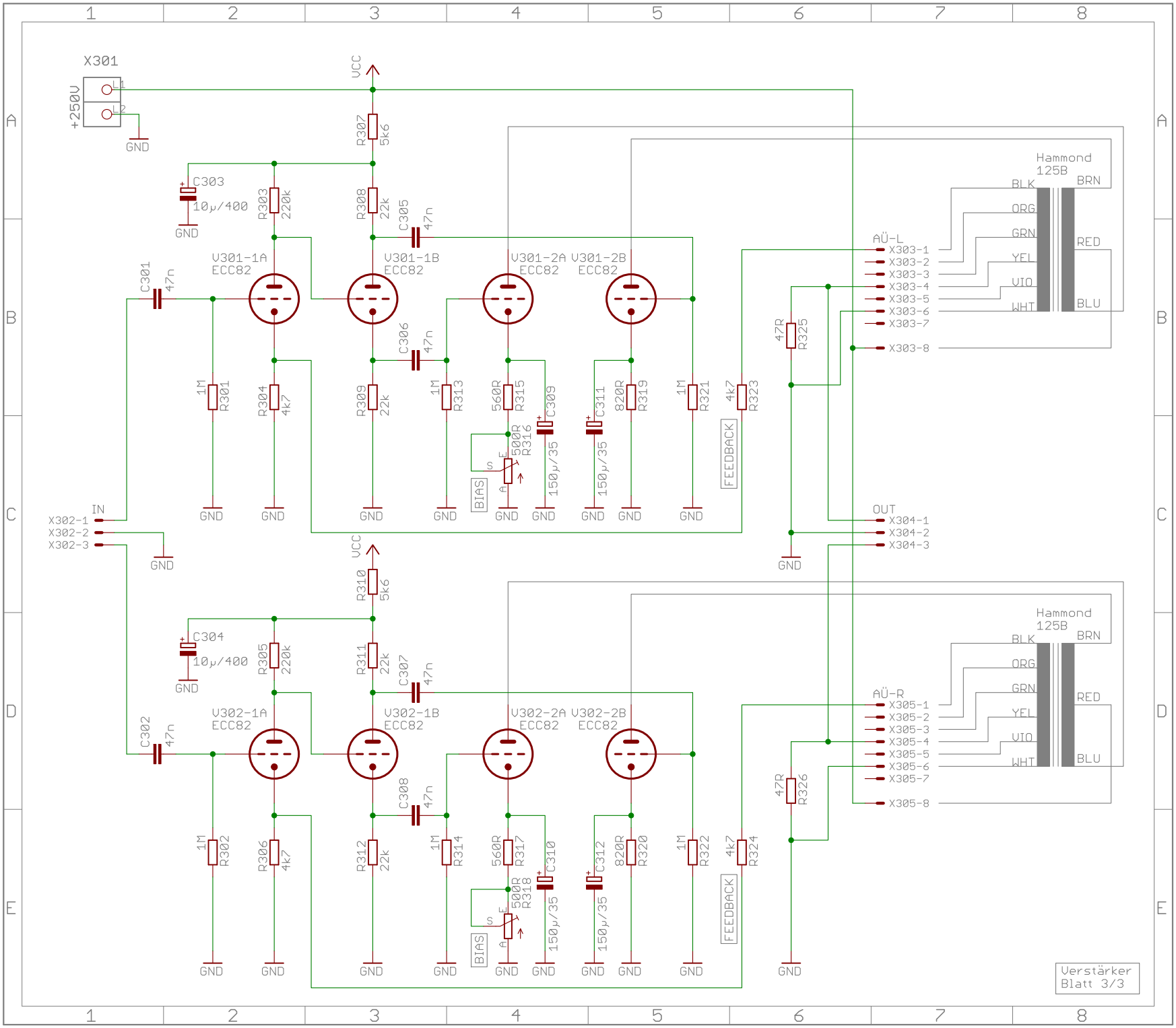
X301
+250V
GND
VCC
R307 5k6
C303 10µ/400
R303 220k
R308 22k
C305 47n
V301-1A ECC82
V301-1B ECC82
V301-2A ECC82
V301-2B ECC82
C301 47n
C306 47n
1M R301
R304 4k7
R309 22k
1M R313
560R R315
C309 150µ/35
500R R316
BIAS
C311 150µ/35
820R R319
1M R321
4k7 R323
FEEDBACK
47R R325
Hammond 125B
BLK
BRN
ORG
GRN
YEL
VIO
WHT
RED
BLU
AÜ-L
X303-1
X303-2
X303-3
X303-4
X303-5
X303-6
X303-7
X303-8
IN
X302-1
X302-2
X302-3
OUT
X304-1
X304-2
X304-3
R310 5k6
C304 10µ/400
R305 220k
R311 22k
C307 47n
V302-1A ECC82
V302-1B ECC82
V302-2A ECC82
V302-2B ECC82
C302 47n
C308 47n
1M R302
R306 4k7
R312 22k
1M R314
560R R317
C310 150µ/35
500R R318
C312 150µ/35
820R R320
1M R322
4k7 R324
47R R326
AÜ-R
X305-1
X305-2
X305-3
X305-4
X305-5
X305-6
X305-7
X305-8
Verstärker
Blatt 3/3