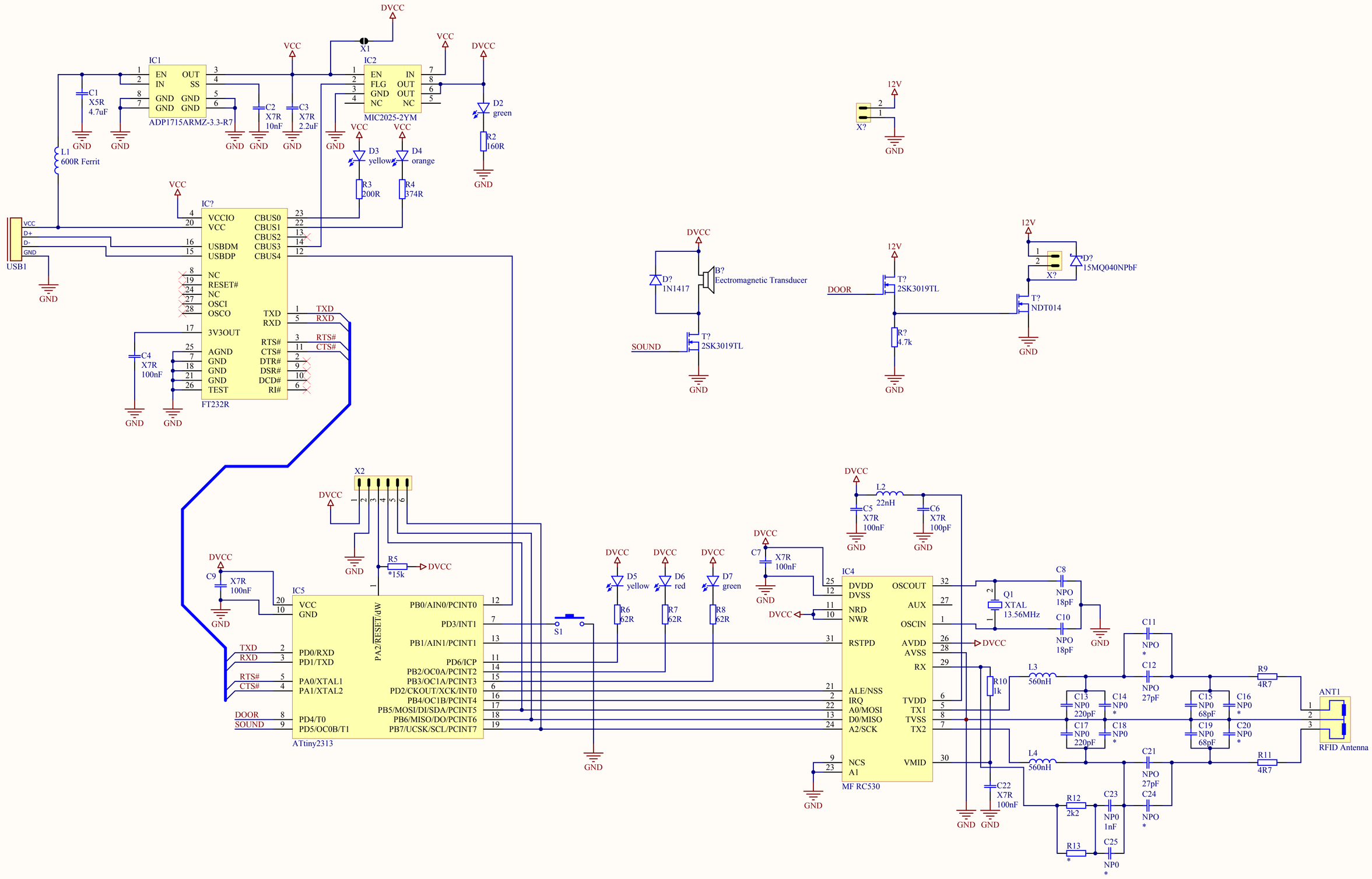

Title		
Size A3	Number	Revision
Date: 23.06.2008		Sheet of
File: F:\Boards\RFID Reader\Sheet1.SchDoc		Drawn By: