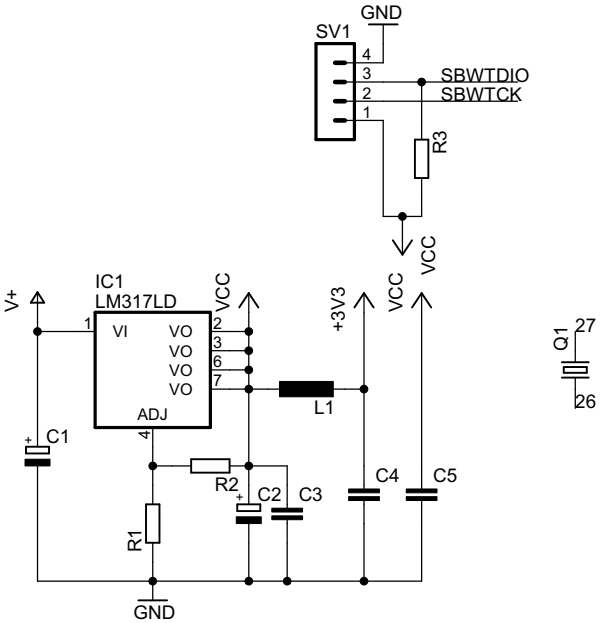
GND
SV1
4
3
2
1
SBWTDIO
SBWTCK
R3
VCC
IC1
LM317LD
V+
VI
VO
VO
VO
VO
ADJ
VCC
+3V3
VCC
VCC
L1
C1
R2
C2
C3
C4
C5
R1
GND
Q1
27
26

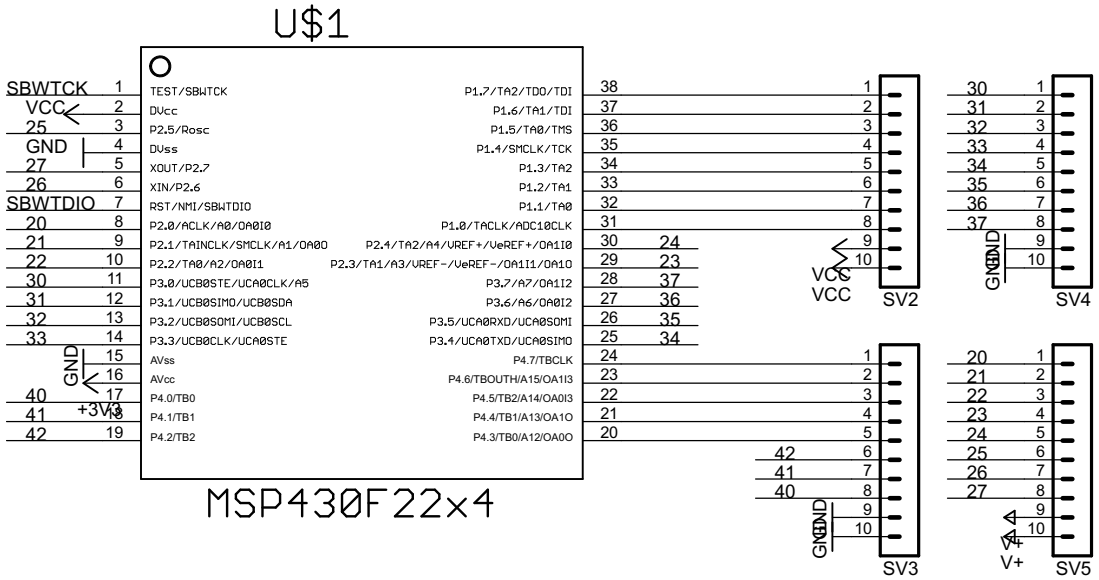
U$1
TEST/SBWTCK
DVcc
P2.5/Rosc
DVss
XOUT/P2.7
XIN/P2.6
RST/NMI/SBWTDIO
P2.0/ACLK/A0/OA0I0
P2.1/TAINCLK/SMCLK/A1/OA0O
P2.2/TA0/A2/OA0I1
P3.0/UCB0STE/UCA0CLK/A5
P3.1/UCB0SIMO/UCB0SDA
P3.2/UCB0SOMI/UCB0SCL
P3.3/UCB0CLK/UCA0STE
AVss
AVcc
P4.0/TB0
P4.1/TB1
P4.2/TB2
P1.7/TA2/TDO/TDI
P1.6/TA1/TDI
P1.5/TA0/TMS
P1.4/SMCLK/TCK
P1.3/TA2
P1.2/TA1
P1.1/TA0
P1.0/TACLK/ADC10CLK
P2.4/TA2/A4/VREF+/VeREF+/OA1I0
P2.3/TA1/A3/VREF-/VeREF-/OA1I1/OA1O
P3.7/A7/OA1I2
P3.6/A6/OA0I2
P3.5/UCA0RXD/UCA0SOMI
P3.4/UCA0TXD/UCA0SIMO
P4.7/TBCLK
P4.6/TBOUTH/A15/OA1I3
P4.5/TB2/A14/OA0I3
P4.4/TB1/A13/OA1O
P4.3/TB0/A12/OA0O
SBWTCK
VCC
GND
SBWTDIO
GND
+3V3
VCC
VCC
GND
GND
V+
SV2
SV3
SV4
SV5
MSP430F22x4