Microcontroller

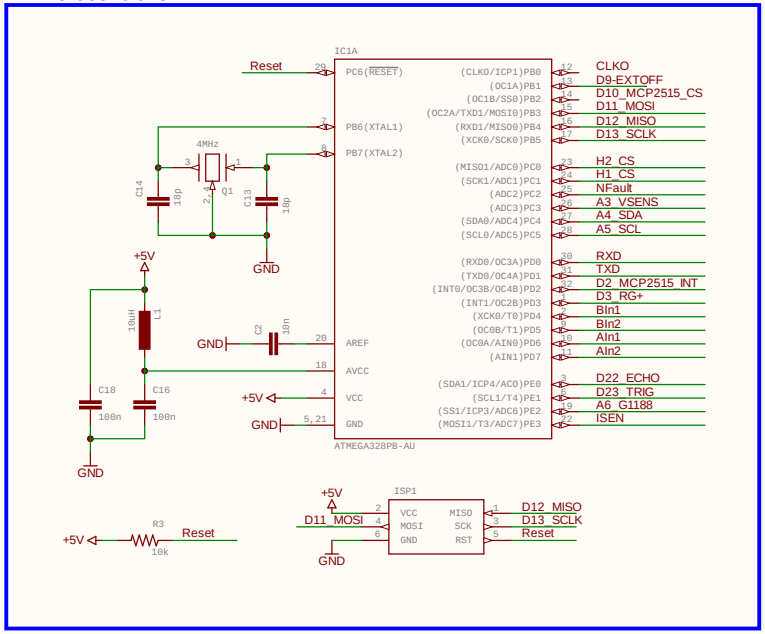

Data bus

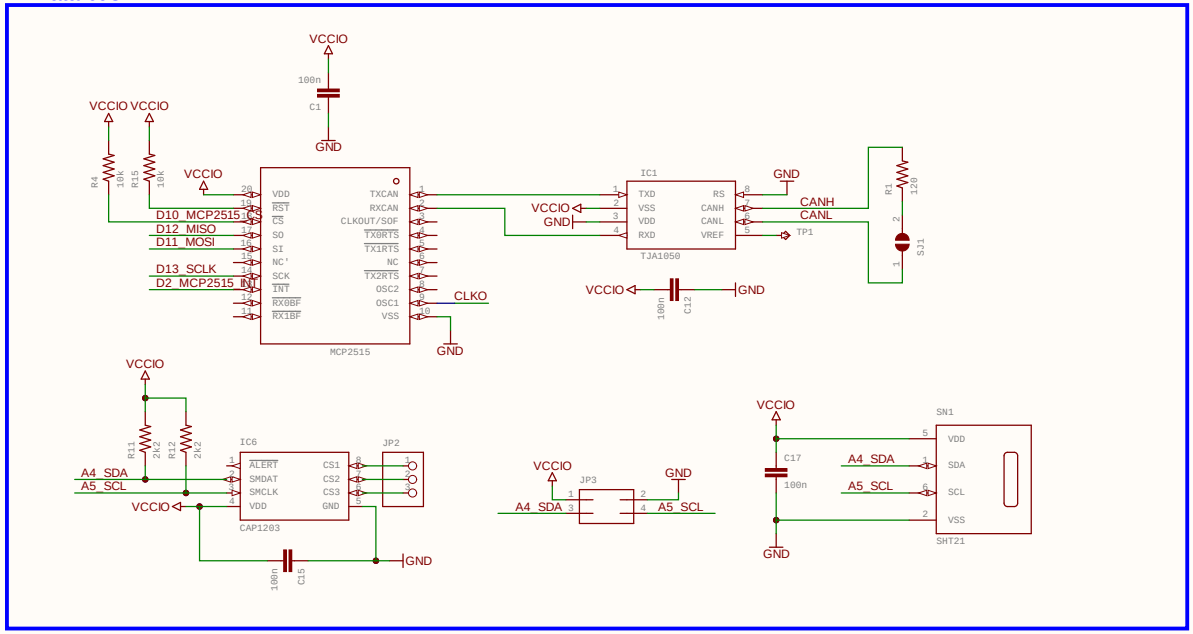

Power

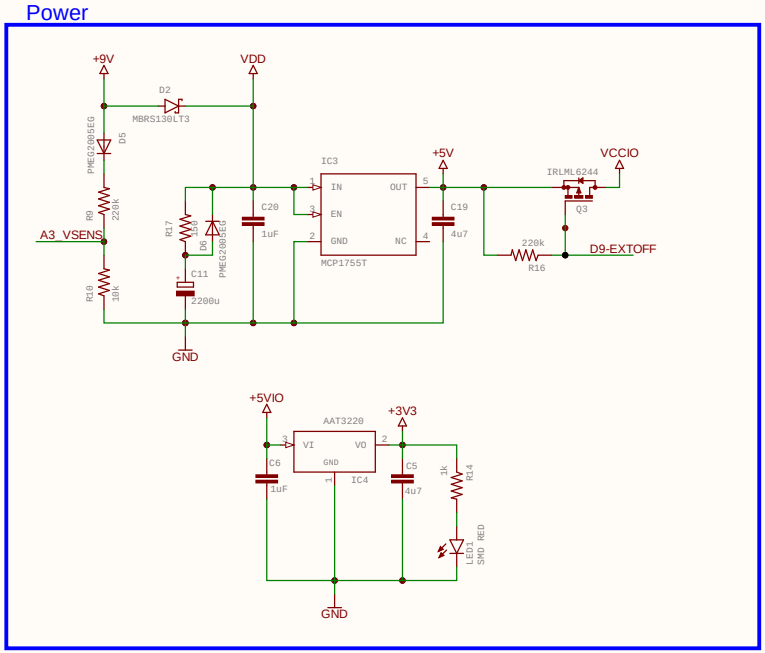

Driver

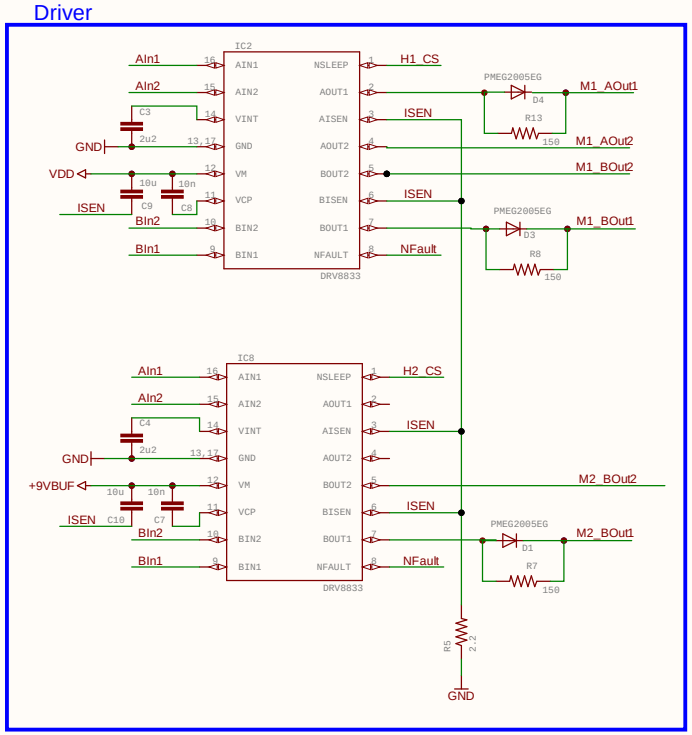

I/O Connectors

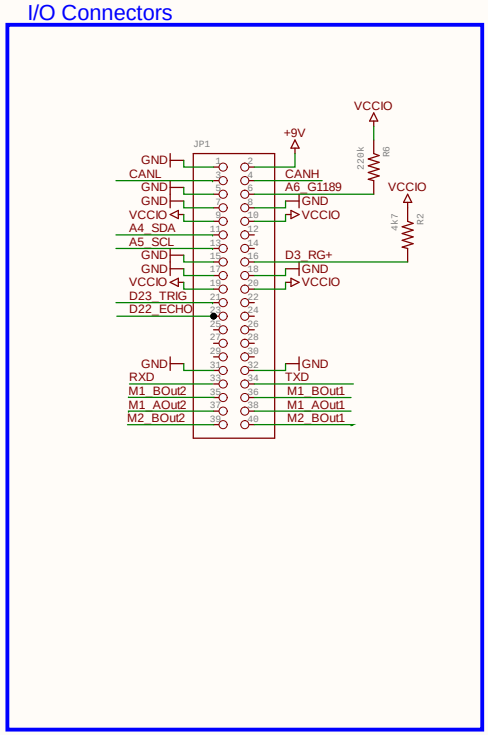

TODO:
No solder stop around daughter mounting holes
Wire holes to solder test cables (A7, AREF)
Capacitors closer to M328PB
IDEAS:
HC-SR04 TRIG and ECHO on one line