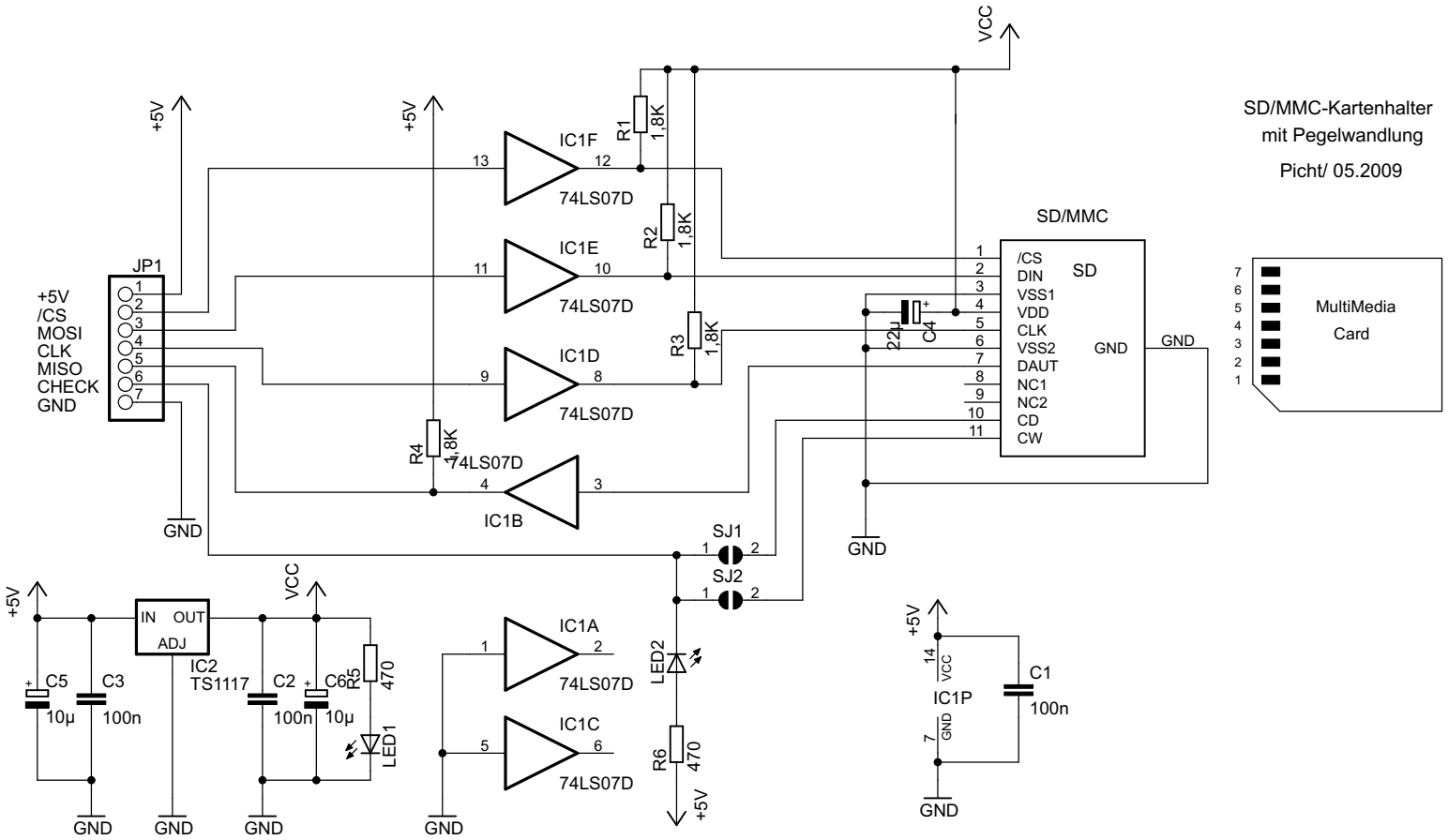
SD/MMC-Kartenhalter
mit Pegelwandlung
Picht/ 05.2009
JP1
+5V
/CS
MOSI
CLK
MISO
CHECK
GND
IC1F
IC1E
IC1D
IC1B
IC1A
IC1C
74LS07D
R1 1,8K
R2 1,8K
R3 1,8K
R4 1,8K
R5 470
R6 470
SJ1
SJ2
LED1
LED2
IC2
TS1117
IN
OUT
ADJ
C1 100n
C2 100n
C3 100n
C4 22µ
C5 10µ
C6 10µ
IC1P
VCC
GND
SD/MMC
SD
/CS
DIN
VSS1
VDD
CLK
VSS2
DAUT
NC1
NC2
CD
CW
MultiMedia
Card