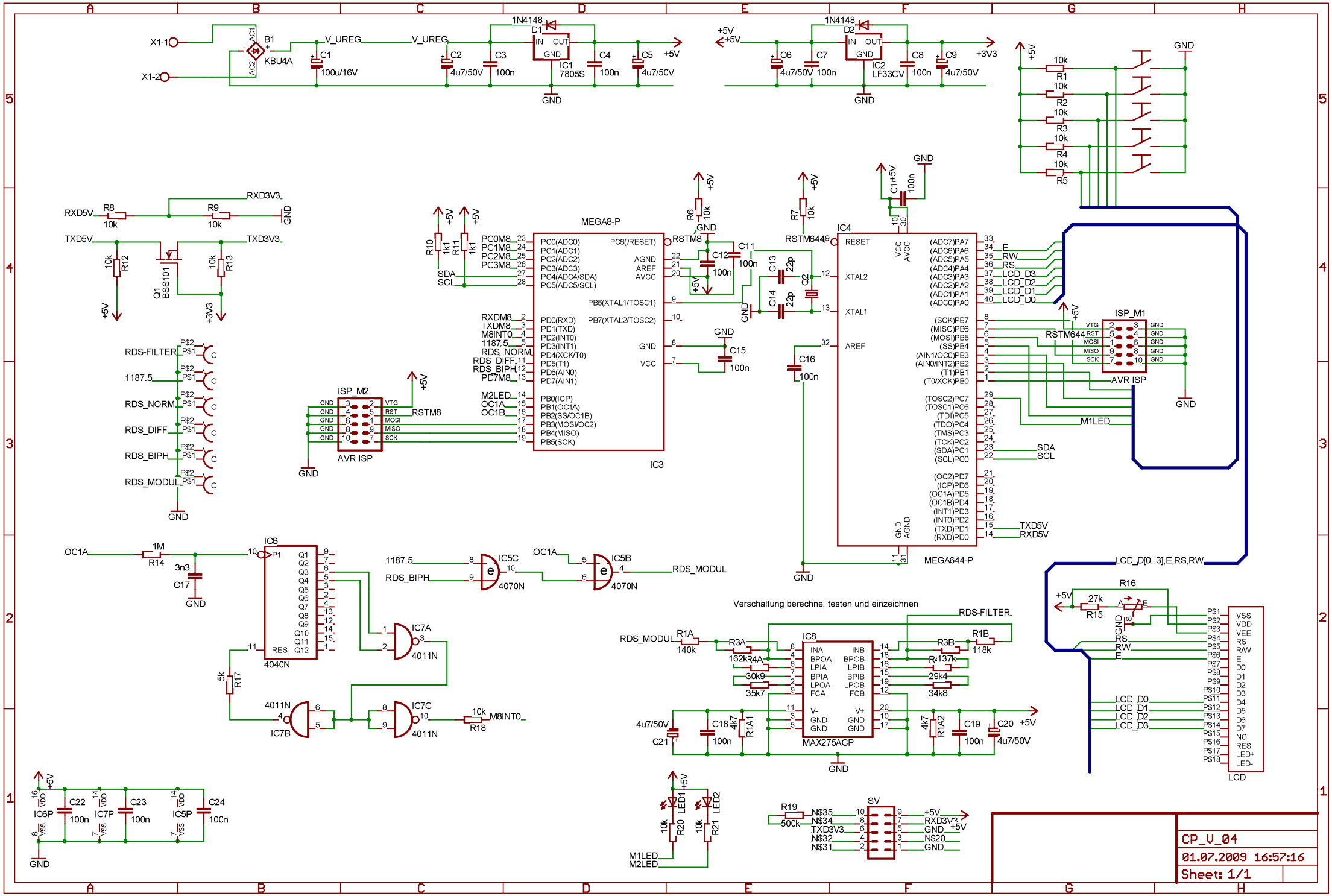
X1-1
X1-2
B1
KBU4A
V_UREG
C1
100u/16V
C2
4u7/50V
C3
100n
1N4148
D1
IC1
7805S
C4
100n
C5
4u7/50V
+5V
GND
D2
IC2
LF33CV
C6
C7
C8
C9
+3V3
R1
R2
R3
R4
R5
10k
RXD5V
TXD5V
R8
R9
RXD3V3
TXD3V3
R12
R13
Q1
BSS101
+3V3
RDS-FILTER
1187.5
RDS_NORM
RDS_DIFF
RDS_BIPH
RDS_MODUL
MEGA8-P
IC3
PC0M8
PC1M8
PC2M8
PC3M8
SDA
SCL
R10
R11
1k1
RXDM8
TXDM8
M8INT0
RDS_NORM
RDS_DIFF
RDS_BIPH
PD7M8
M2LED
OC1A
OC1B
RSTM8
R6
C11
100n
C12
100n
C15
100n
ISP_M2
AVR ISP
VTG
RST
MOSI
MISO
SCK
IC4
MEGA644-P
RSTM644
R7
C13
22p
C14
22p
Q2
C16
100n
C1
ISP_M1
M1LED
LCD_D[0..3],E,RS,RW
R16
27k
R15
LCD
VSS
VDD
VEE
RS
R/W
E
D0
D1
D2
D3
D4
D5
D6
D7
NC
RES
LED+
LED-
OC1A
1M
R14
3n3
C17
IC6
4040N
5k
R17
IC7A
4011N
IC7B
IC7C
10k
R18
M8INT0
IC5C
4070N
IC5B
RDS_MODUL
Verschaltung berechne, testen und einzeichnen
IC8
MAX275ACP
R1A
140k
R3A
162k
R4A
30k9
35k7
R1B
118k
R3B
137k
29k4
34k8
C18
100n
C21
4u7/50V
C19
100n
C20
4u7/50V
R1A1
R1A2
4k7
IC6P
IC7P
IC5P
C22
C23
C24
LED1
LED2
R20
R21
M1LED
M2LED
R19
500k
SV
N$35
N$34
N$32
N$31
RXD3V3
N$20
CP_V_04
01.07.2009 16:57:16
Sheet: 1/1