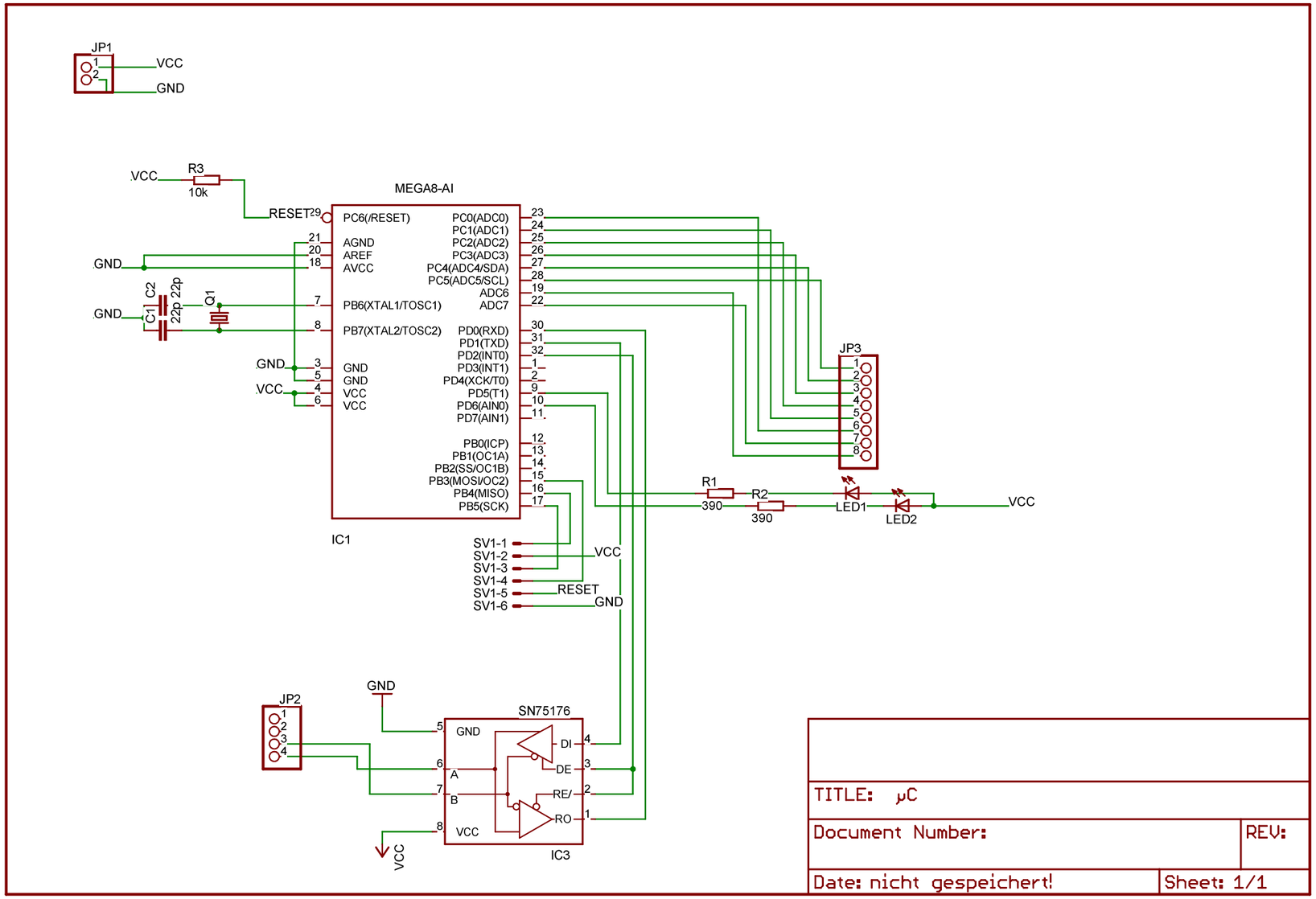

16.07.2009 08:04:22 C:\Programme\EAGLE-4.16r2\projects\examples\Jumper\µC.sch (Sheet: 1/1)