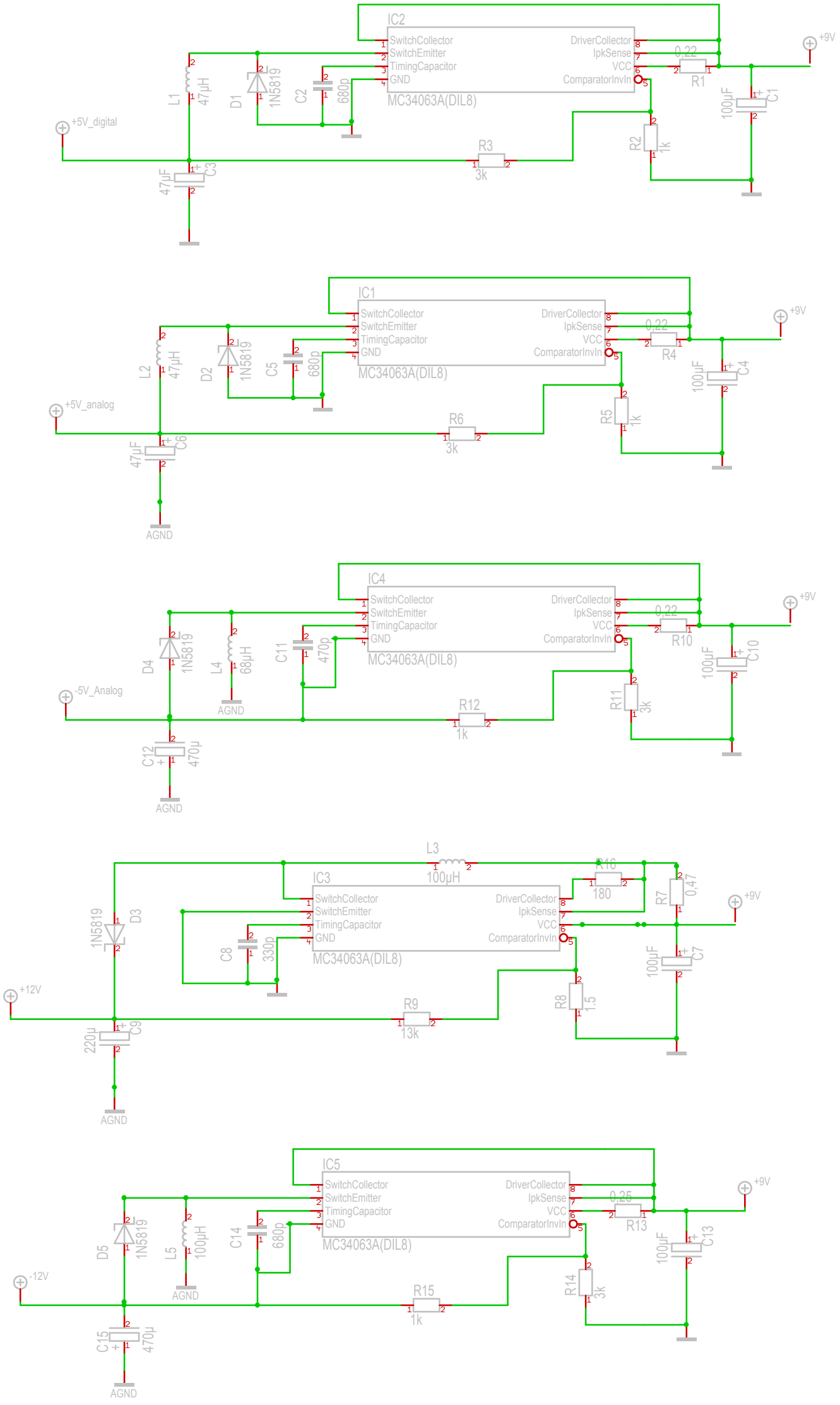
IC2
SwitchCollector
SwitchEmitter
TimingCapacitor
GND
DriverCollector
IpkSense
VCC
ComparatorInvIn
MC34063A(DIL8)
+9V
0,22
R1
100µF
C1
L1
47µH
D1
1N5819
C2
680p
+5V_digital
R3
3k
R2
1k
47µF
C3
IC1
SwitchCollector
SwitchEmitter
TimingCapacitor
GND
DriverCollector
IpkSense
VCC
ComparatorInvIn
MC34063A(DIL8)
+9V
0,22
R4
100µF
C4
L2
47µH
D2
1N5819
C5
680p
+5V_analog
R6
3k
R5
1k
47µF
C6
AGND
IC4
SwitchCollector
SwitchEmitter
TimingCapacitor
GND
DriverCollector
IpkSense
VCC
ComparatorInvIn
MC34063A(DIL8)
+9V
0,22
R10
100µF
C10
D4
1N5819
L4
68µH
C11
470p
-5V_Analog
AGND
R12
1k
R11
3k
C12
470µ
AGND
L3
100µH
IC3
SwitchCollector
SwitchEmitter
TimingCapacitor
GND
DriverCollector
IpkSense
VCC
ComparatorInvIn
MC34063A(DIL8)
R16
180
R7
0,47
+9V
100µF
C7
1N5819
D3
C8
330p
+12V
R9
13k
R8
1,5
220µ
C9
AGND
IC5
SwitchCollector
SwitchEmitter
TimingCapacitor
GND
DriverCollector
IpkSense
VCC
ComparatorInvIn
MC34063A(DIL8)
+9V
0,25
R13
100µF
C13
D5
1N5819
L5
100µH
C14
680p
-12V
AGND
R15
1k
R14
3k
C15
470µ
AGND