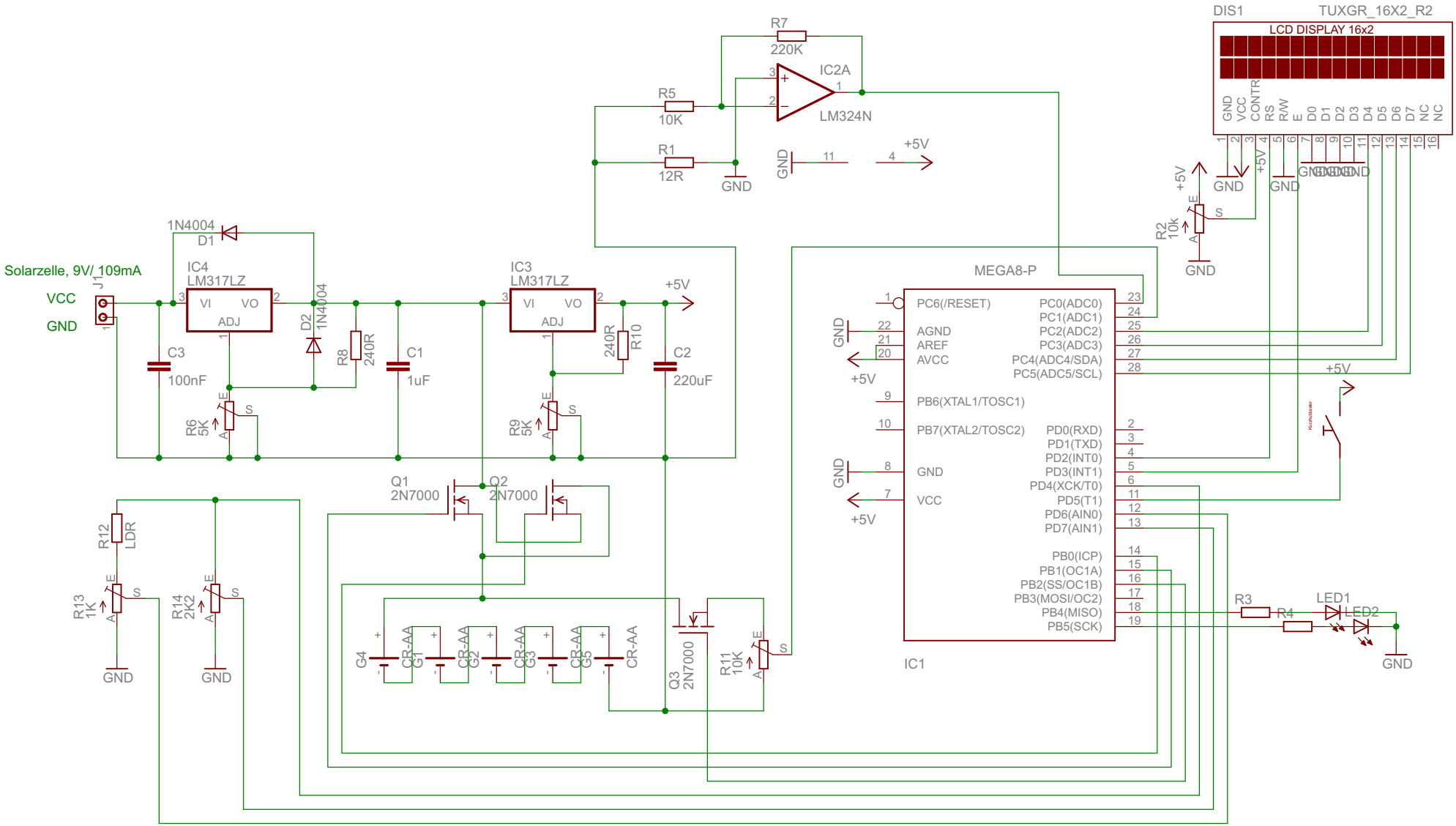
Solarzelle, 9V/ 109mA
VCC
GND
J1
1N4004
D1
IC4
LM317LZ
VI
VO
ADJ
D2
1N4004
R8
240R
C1
1uF
C3
100nF
R6
5K
IC3
LM317LZ
R10
240R
C2
220uF
R9
5K
+5V
R7
220K
IC2A
LM324N
R5
10K
R1
12R
GND
DIS1
TUXGR_16X2_R2
LCD DISPLAY 16x2
GND
VCC
CONTR
RS
R/W
E
D0
D1
D2
D3
D4
D5
D6
D7
NC
NC
R2
10k
MEGA8-P
PC6(/RESET)
AGND
AREF
AVCC
PB6(XTAL1/TOSC1)
PB7(XTAL2/TOSC2)
GND
VCC
PC0(ADC0)
PC1(ADC1)
PC2(ADC2)
PC3(ADC3)
PC4(ADC4/SDA)
PC5(ADC5/SCL)
PD0(RXD)
PD1(TXD)
PD2(INT0)
PD3(INT1)
PD4(XCK/T0)
PD5(T1)
PD6(AIN0)
PD7(AIN1)
PB0(ICP)
PB1(OC1A)
PB2(SS/OC1B)
PB3(MOSI/OC2)
PB4(MISO)
PB5(SCK)
IC1
Q1
2N7000
Q2
2N7000
Q3
2N7000
R12
LDR
R13
1K
R14
2K2
R11
10K
G4
CR-AA
G1
CR-AA
G2
CR-AA
G3
CR-AA
G5
CR-AA
R3
R4
LED1
LED2