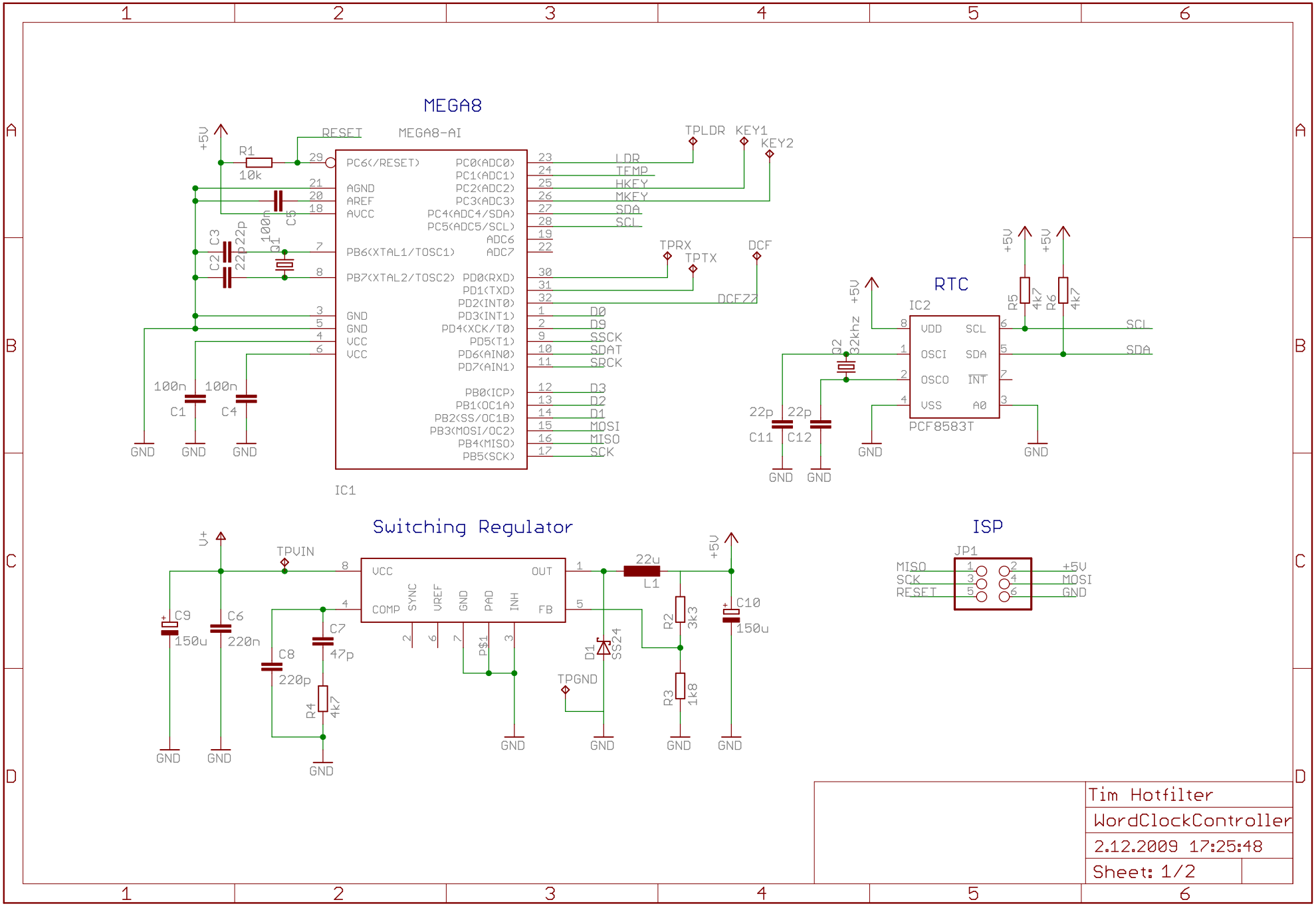

Tim Hotfilter	
WordClockController	
2.12.2009 17:25:48	
Sheet: 1/2	

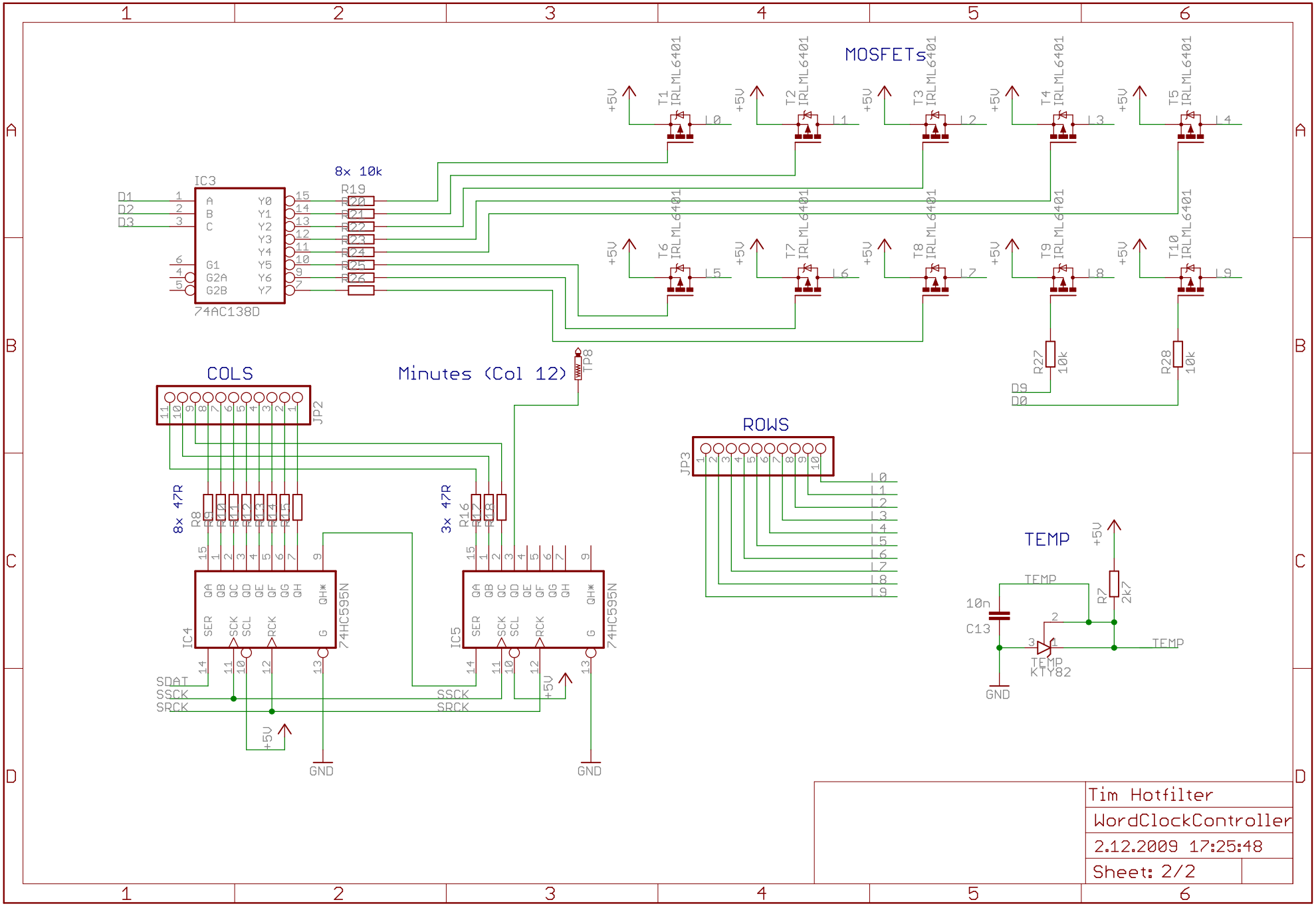

Tim Hotfilter

WordClockController

2.12.2009 17:25:48

Sheet: 2/2