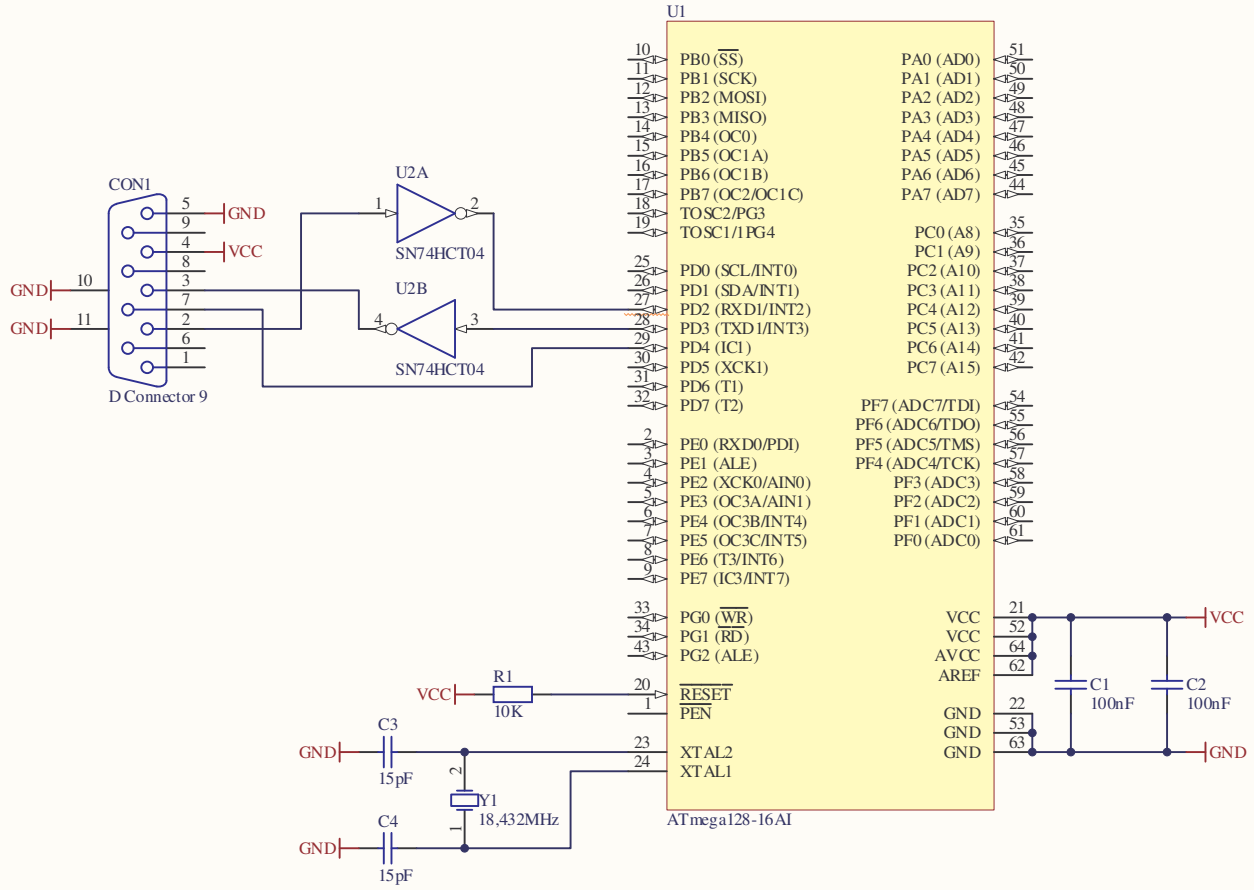

Title		
Size A4	Number	Revision
Date: 21.04.2005		Sheet of
File: Sheet1.SchDoc		Drawn By: