| PREPARED BY : DATE | SHARP | SPEC No. LCP-03011 |
|---|---|---|
| | | FILE No. |
| APPROVED BY : DATE | | ISSUE : Apr. 16. 2003 |
| | | PAGE : 22 pages |
| | MOBILE LIQUID CRYSTAL DISPLAY GROUP<br>SHARP CORPORATION | Design Center<br>MOBILE LCD Enterprise<br>Development Center |
| | SPECIFICATION | |

DEVICE SPECIFICATION FOR

# TFT-LCD module

MODEL No. LQ038Q7DB03

☐ CUSTOMER'S APPROVAL

DATA

BY

PRESENTED BY 中辻晴雄

H.Nakatsuji

DEPARTMENT GENERAL MANAGER
Development Department VI
Design Center
MOBILE LCD Enterprise development Center
MOBILE LCD GROUP
SHARP CORPORATION

# NOTICE



The application circuit examples in this publication are provided to explain the representative applications of SHARP's devices and are not intended to guarantee any circuit design or permit any industrial property right or other rights to be executed. SHARP takes no responsibility for any problems related to any industrial property right or a third party resulting from the use of SHARP's devices, except for those resulting directly from device manufacturing processes.

In the absence of confirmation by device specification sheets, SHARP takes no responsibility for any defects that occur in equipment using any of SHARP's devices, shown in catalogs, data books, etc. Contact SHARP in order to obtain the latest device specification sheets before using any SHARP's device.

SHARP reserves the right to make changes in the specifications, characteristics, data, materials, structures and other contents described herein at any time without notice in order to improve design or reliability. Contact SHARP in order to obtain the latest specification sheets before using any SHARP's device. Manufacturing locations are also subject to change without notice.

Observe the following points when using any device in this publication. SHARP takes no responsibility for damage caused by improper use of the devices.

The devices in this publication are designed for use in general electronic equipment designs, such as:

- Personal computers
- Office automation
- Telecommunication equipment
- Test and measurement equipment
- Industrial control
- Audio visual and multimedia equipment
- Consumer electronics

The appropriate design measures should be taken to ensure reliability and safety when SHARP's devices are used for equipment such as:

- Transportation control and safety equipment(i.e., aircraft, trains, automobiles, etc.)
- Traffic signals
- Gas leakage sensor breakers
- Alarm equipment
- Various safety devices etc.

SHARP's devices shall not be used for equipment that requires extremely high level of reliability, such as:

- Military and space applications
- Nuclear power control equipment
- Medical equipment for life support

Contact a SHARP representative, in advance, when intending to use SHARP's devices for any "specific" applications other than those recommended by SHARP.

Contact and consult with a SHARP representative if there are any questions about the contents of this publication.

(1) Application

This literature applies to LQ038Q7DB03.

(2) Overview

This module is a color reflective and active matrix LCD module incorporating amorphous silicon TFT (Thin Film Transistor), named AD-TFT(Advanced TFT). It is composed of a color TFT-LCD panel, driver ICs, an FPC, a back light, and a back sealed casing. It isn't composed control circuit. Graphics and texts can be displayed on a 240×3×320 dots panel with 262,144 colors by supplying.

Optimum view angle is 6 o'clock. An inverted display mode is selective in the vertical or the horizontal direction.

(3) Mechanical specifications

Table 1

| Parameter | Specifications | Units | Remarks |
|---|---|---|---|
| Screen size (Diagonal) | 9.54 [3.78" ] Diagonal | cm | |
| Display active area | 57.6 (H) ×76.8 (V) | mm | |
| Touch panel active area | 57.9 (H) ×77.8 (V) | mm | |
| Pixel format | 240(H)×320(V)<br>(1 pixel = R+G+B dots) | pixels | |
| Pixel pitch | 0.24 (H) ×0.24 (V) | mm | |
| Pixel configuration | R,G,B vertical stripe | | |
| Unit outline dimension | 69.0(W)×88.6(H)×3.4(D) | mm | [Note3-1] |
| Mass | 42 | g | |
| Surface hardness (Touch panel) | 3H | | |

[Note 3-1]

Excluding FPC. For detailed measurements and tolerances, please refer to Fig. 1.

(4)Pixel configuration

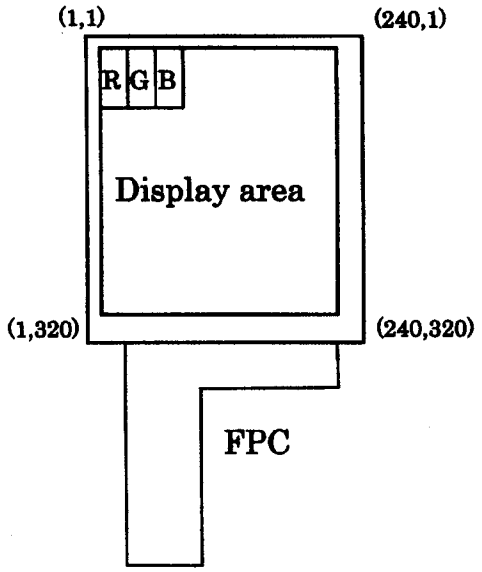

(5)Input/Output terminal

5-1)TFT-LCD panel driving section

Table2

| Pin No. | Symbol | I/O | Description | Remarks |
|---|---|---|---|---|
| 1 | DGND | — | Ground(digital) | |
| 2 | VSHA | — | Power supply(analog) | |
| 3 | NC | — | | |
| 4 | VSHD | — | Power supply of digital | |
| 5 | VDD | — | Power supply of gate driver(high level) | |
| 6 | NC | — | | |
| 7 | VEE | — | Power supply of gate driver(low level) | |
| 8 | NC | — | | |
| 9 | VCOM | I | Common electrode driving signal | 【Note5-1】 |
| 10 | VCOM | I | Common electrode driving signal | 【Note5-1】 |
| 11 | VSS | — | Power supply of gate driver(logic low) | |
| 12 | VCC | — | Power supply of gate driver(logic high) | |
| 13 | NC | — | | |
| 14 | R0 | I | RED data signal(LSB) | |
| 15 | R1 | I | RED data signal | |
| 16 | R2 | I | RED data signal | |
| 17 | R3 | I | RED data signal | |
| 18 | R4 | I | RED data signal | |
| 19 | R5 | I | RED data signal(MSB) | |
| 20 | G0 | I | GREEN data signal(LSB) | |
| 21 | G1 | I | GREEN data signal | |
| 22 | G2 | I | GREEN data signal | |
| 23 | G3 | I | GREEN data signal | |
| 24 | G4 | I | GREEN data signal | |
| 25 | G5 | I | GREEN data signal(MSB) | |
| 26 | B0 | I | BLUE data signal(LSB) | |
| 27 | B1 | I | BLUE data signal | |
| 28 | B2 | I | BLUE data signal | |
| 29 | B3 | I | BLUE data signal | |
| 30 | B4 | I | BLUE data signal | |
| 31 | B5 | I | BLUE data signal(MSB) | |
| 32 | V0 | I | Standard voltage to generate gray scale voltage | |
| 33 | V1 | I | Standard voltage to generate gray scale voltage | |
| 34 | V2 | I | Standard voltage to generate gray scale voltage | |
| 35 | V3 | I | Standard voltage to generate gray scale voltage | |
| 36 | V4 | I | Standard voltage to generate gray scale voltage | |
| 37 | NC | — | | |

| Pin No. | Symbol | I/O | Description | Remarks |
|---|---|---|---|---|
| 38 | NC | － | | |
| 39 | NC | － | | |
| 40 | AGND | － | Ground(Analog) | |
| 41 | NC | － | | |
| 42 | NC | － | | |
| 43 | NC | － | | |
| 44 | DCLK | I | Data sampling clock signal | |
| 45 | SPL | I/O | Sampling start signal | |
| 46 | LP | I | Data latch signal of source driver | |
| 47 | CLS | I | Clock signal of gate driver | |
| 48 | SPS | I | Start signal of gate driver | |
| 49 | PS | I | Power save signal | |
| 50 | NC | － | | |
| 51 | MOD | I | Control signal of gate driver | 【Note5-2】 |
| 52 | MOD | I | Control signal of gate driver | 【Note5-2】 |
| 53 | U/L | I | Selection for vertical scanning direction | 【Note5-3】 |
| 54 | LBR | I | Selection for horizontal scanning direction | 【Note5-4】 |
| 55 | DGND | － | Ground(digital) | |
| 56 | SPR | I/O | Sampling start signal | |
| 57 | LED+ | － | Power supply for LED (High voltage) | |
| 58 | LED+ | － | Power supply for LED (High voltage) | |
| 59 | LED－ | － | Power supply for LED (Low voltage) | |
| 60 | LED－ | － | Power supply for LED (Low voltage) | |
| 61 | AGND | － | Ground(Analog) | |

【Note5-1】 See section(7-1)-(A) and 【Note 7-8】

【Note5-2】 See section(7-1)-(A) "※Cautions when you turn on or off the power supply".

【Note5-3】 Selection for vertical scanning direction

| U/L | Scanning direction (Pixel configuration) |
|---|---|
| High | Normal scanning (X , 1)<br>↑<br>(X , 320) |
| Low | Inverted scanning (X , 1)<br>↓<br>(X , 320) |

【Note5-4】 Selection for horizontal scanning direction

| LBR | SPL | SPR | Scanning direction (Pixel configuration) |
|---|---|---|---|
| High | Input | Output | Normal scanning (1,Y) → (240,Y) |
| Low | Output | Input | Inverted scanning (1,Y) ← (240,Y) |

(6)Absolute Maximum Ratings

Table 4

| Parameter | Symbol | Condition | Ratings | Unit | Remark |
|---|---|---|---|---|---|
| Power supply(source/Analog) | $V_{SHA}$ | Ta=25℃ | −0.3～+7.0 | V | |
| Power supply(source/Digital) | $V_{SHD}$ | Ta=25℃ | −0.3～+7.0 | V | |
| Power supply (gate) | $V_{DD}$ | Ta=25℃ | −0.3～+35.0 | V | |
| Power supply (gate) | $V_{EE}-V_{SS}$ | Ta=25℃ | −0.3～+35.0 | V | |
| Power supply (gate) | $V_{CC}-V_{SS}$ | Ta=25℃ | −0.3～+7.0 | V | |
| Power supply (gate) | $V_{DD}-V_{EE}$ ($V_{SS}$) | Ta=25℃ | −0.3～+35.0 | V | |
| Input voltage (Analog) | $V_{IA}$ | Ta=25℃ | −0.3～$V_{SHA}$+0.3 | V | [Terminal①] |
| Input voltage (Digital) | $V_{ID}$ | Ta=25℃ | −0.3～$V_{SHD}$+0.3 | V | [Terminal②] |
| Operating temperature (panel surface) | T opp | − | 0～50 | ℃ | 【Note6-1】 |
| Storage temperature | T stg | − | −25～70 | ℃ | 【Note6-1】 |

[Terminal①] V0,V1,V2,V3,V4

[Terminal②] MOD,U/L,SPS,CLS,SPL,R0～R5,G0～G5,B0～B5,LP,DCLK,LBR,SPR,PS

【Note6-1】 Humidity: 95%RH Max.(at Ta ≦ 40℃). Maximum wet-bulb temperature is less than 39℃ (at Ta > 40℃). Condensation of dew must be avoided.

(7)Electrical characteristics

7-1)Recommended operating conditions

A) TFT-LCD panel driving section

Table 6 GND=0V

| Parameter | | Symbol | Min. | Typ. | Max. | Unit | Remarks |
|---|---|---|---|---|---|---|---|
| Supply voltage for source driver (Analog) | | $V_{SHA}$ | +4.5 | +5.0 | +5.5 | V | |
| Supply voltage for source driver (Digital) | | $V_{SHD}$ | +3.0 | +3.3 | +3.6 | V | |
| Standard input voltage | | V0～V4 | 0 | − | $V_{SHA}$ | V | 【Note 7-1】 |
| Supply voltage for gate driver | High voltage | $V_{DD}$ | +14.5 | +15.0 | +15.5 | V | |
| | Logic high voltage | $V_{CC}$ | $V_{SS}+V_{SHD}$ −0.1 | $V_{SS}+V_{SHD}$ | $V_{SS}+V_{SHD}$ +0.1 | V | 【Note 7-2】 |
| | Logic low voltage | $V_{SS}$ | −14.3 | −15.0 | −15.7 | V | |
| | Low voltage (AC) | $V_{EEAC}$ | − | $V_{COMAC}$ | − | Vp-p | 【Note 7-3】 |
| | Low voltage (DC) | $V_{EEDC}$ | −9.5 | −9.0 | −8.5 | V | 【Note 7-3】 |
| Input voltage for Source driver (Low) | | $V_{ILS}$ | GND | − | $0.2V_{SHD}$ | V | 【Note 7-4】 |
| Input voltage for Source driver (High) | | $V_{IHS}$ | $0.8V_{SHD}$ | − | $V_{SHD}$ | V | 【Note 7-4】 |
| Input current for Source driver (Low) | | $I_{ILS}$ | − | − | 30 | μA | 【Note 7-4】 |
| Input current for Source driver (High) | | $I_{IHS1}$ | − | − | 30 | μA | 【Note 7-5】 |
| | | $I_{IHS2}$ | − | − | 1200 | μA | 【Note 7-6】 |
| Input voltage for Gate driver (Low) | | $V_{ILG}$ | GND | − | $0.2V_{SHD}$ | V | 【Note 7-7】 |
| Input voltage for Gate driver (High) | | $V_{IHG}$ | $0.8V_{SHD}$ | − | $V_{SHD}$ | V | 【Note 7-7】 |
| Input current for Gate driver (Low) | | $I_{ILG}$ | − | − | 4 | μA | 【Note 7-7】 |
| Input current for Gate driver (High) | | $I_{IHG}$ | − | − | 4 | μA | 【Note 7-7】 |
| Common electrode driving signal | AC component | $V_{COMAC}$ | − | ±2.5 | ±2.6 | Vp-p | 【Note 7-8】 |
| | DC component | $V_{COMDC}$ | +0.1 | +1.1 | +2.1 | V | 【Note 7-8】 |

※Cautions when you turn on or off the power supply

① Turn on or off the power supply with simultaneously or the following sequence.

Turn on … $V_{SHD}$→$V_{SHA}$ → $V_{SS}$ → $V_{CC}$ → $V_{EE}$ → $V_{DD}$

Turn off … $V_{DD}$ → $V_{EE}$ → $V_{CC}$ → $V_{SS}$ →$V_{SHA}$→ $V_{SHD}$

② The input signal of "MOD" Terminals(Pin No.51 and No.52) must be low voltage when turning on the power supply, and it is held until more than double vertical periods after $V_{CC}$ is turned on completely. After then, it must be held high voltage until turning off the power supply.(Connect Pin No.51 and No.52 terminals to the same signal.)

【Note 7-1】 These are standard input voltages for gray scale. When $V_{COM}$ is alternated polarity, these voltage should be alternated polarity. V0(black) is different polarity alternating signal of $V_{COM}$. V4(white) is the same polarity alternating signal of $V_{COM}$. Center voltage of each standard input voltage shift positive way for LCD characteristics (V0→V1→V2→V3→V4). This sift amount is adjusted so as to no flicker of each standard input voltage after DC bias voltage of $V_{COM}$ and V0 is adjusted.

【Note 7-2】 It must be kept that 3.0V≦($V_{CC}$-$V_{SS}$)≦3.6V.

【Note 7-3】 The same phase and amplitude with $V_{COM}$. $V_{EEDC}$ is center of $V_{EE}$.

【Note 7-4】 DCLK,SPL,SPR,LBR,LP,PS,R0～R5,G0～G5 and B0～B5 terminals are applied.

【Note 7-5】 DCLK,SPL,SPR,LBR,LP,R0～R5,G0～G5 and B0～B5 terminals are applied.

【Note 7-6】 PS terminal is applied.

【Note 7-7】 MOD,CLS,SPS and U/L terminals are applied.

【Note 7-8】 $V_{COMAC}$ should be alternated on $V_{COMDC}$ every 1 horizontal period and 1 vertical period. $V_{COMDC}$ bias is adjusted so as to minimize flicker or maximum contrast every each module .

B) Back light driving section

Table 7 Ta=25℃

| Parameter | Symbol | MIN | TYP | MAX | Units | Remarks terminal |
|---|---|---|---|---|---|---|
| LED voltage | $V_L$ | − | 32.4 | 36.0 | V | |
| LED current | $I_L$ | − | 15 | 20 | mA | |
| Power consumption | $W_L$ | − | 486 | 720 | mW | 【Note 7-9】 |

【Note 7-9】 Calculated reference value($I_L$×$V_L$)

7-2) Timing Characteristics of input signals

Table 8 AC Characteristics (1) (VSHA=+5V, VSHD=+3.3V, Ta=25℃)

| Parameter | | Symbol | Min. | Typ. | Max. | Unit | Remark |
|---|---|---|---|---|---|---|---|
| Clock frequency of source driver | | fCK | 4.5 | — | 6.8 | MHz | DCLK |
| Source driver | Rising time of clock | Tcr | — | — | 20 | ns | DCLK |
| | Falling time of clock | Tcf | — | — | 20 | ns | DCLK |
| | Pulse width (High level) | Tcwh | 40 | — | — | ns | DCLK |
| | Pulse width (Low level) | Tcwl | 40 | — | — | ns | DCLK |
| | Frequency of start pulse | fsp | 16.5 | — | 28 | kHz | SPL,SPR |
| | Setup time of start pulse | Tsusp | 15 | — | — | ns | SPL,SPR |
| | Hold time of start pulse | Thsp | 10 | — | — | ns | SPL,SPR |
| | Pulse width of start pulse | Twsp | — | — | 1.5/fCK | ns | SPL,SPR 【Note 7-10】 |
| | Setup time of latch pulse | Tsulp | 20 | — | — | ns | LP |
| | Hold time of latch pulse | Thlp | 20 | — | — | ns | LP |
| | Pulse width of latch pulse | Twlp | 60 | — | — | ns | LP |
| | Setup time of PS | Tsups | 0 | — | — | μs | PS |
| | Hold time of PS | Thps | 0 | — | — | μs | PS |
| Set up time of data | | Tsud | 15 | — | — | ns | R0～R5,G0～G5 ,B0～B5 |
| Hold time of data | | Thd | 10 | — | — | ns | R0～R5,G0～G5 ,B0～B5 |
| Gate driver | Clock frequency | fcls | 16.5 | — | 28 | kHz | CLS |
| | Pulse width of clock(Low) | Twlcls | 5 | — | (1/fclk)-30 | μs | CLS |
| | Pulse width of clock(High) | Twhcls | 30 | — | — | μs | CLS |
| | Rising time of clock | Trcls | — | — | 100 | ns | CLS |
| | Falling time of clock | Tfcls | — | — | 100 | ns | CLS |
| | Setup time of clock | Tsucls | 3 | — | — | μs | CLS |
| | Hold time of clock | Thcls | 0 | — | — | μs | CLS |
| | Frequency of start pulse | fsps | 50 | — | 86 | Hz | SPS |
| | Setup time of start pulse | Tsu | 100 | — | — | ns | SPS |
| | Hold time of start pulse | Th | 300 | — | — | ns | SPS |
| | Rising time of start pulse | Trsp | — | — | 100 | ns | SPS |
| | Falling time of start pulse | Tfsp | — | — | 100 | ns | SPS |
| Vcom | Setup time of Vcom | Tsuvcom | 3 | — | — | μs | Vcom |
| | Hold time of Vcom | Thvcom | 1 | — | — | μs | Vcom |

【Note 7-10】 There must be only one up-edge of DCLK (includes Tsusp and Thsp time) in the period of SPL="Hi".

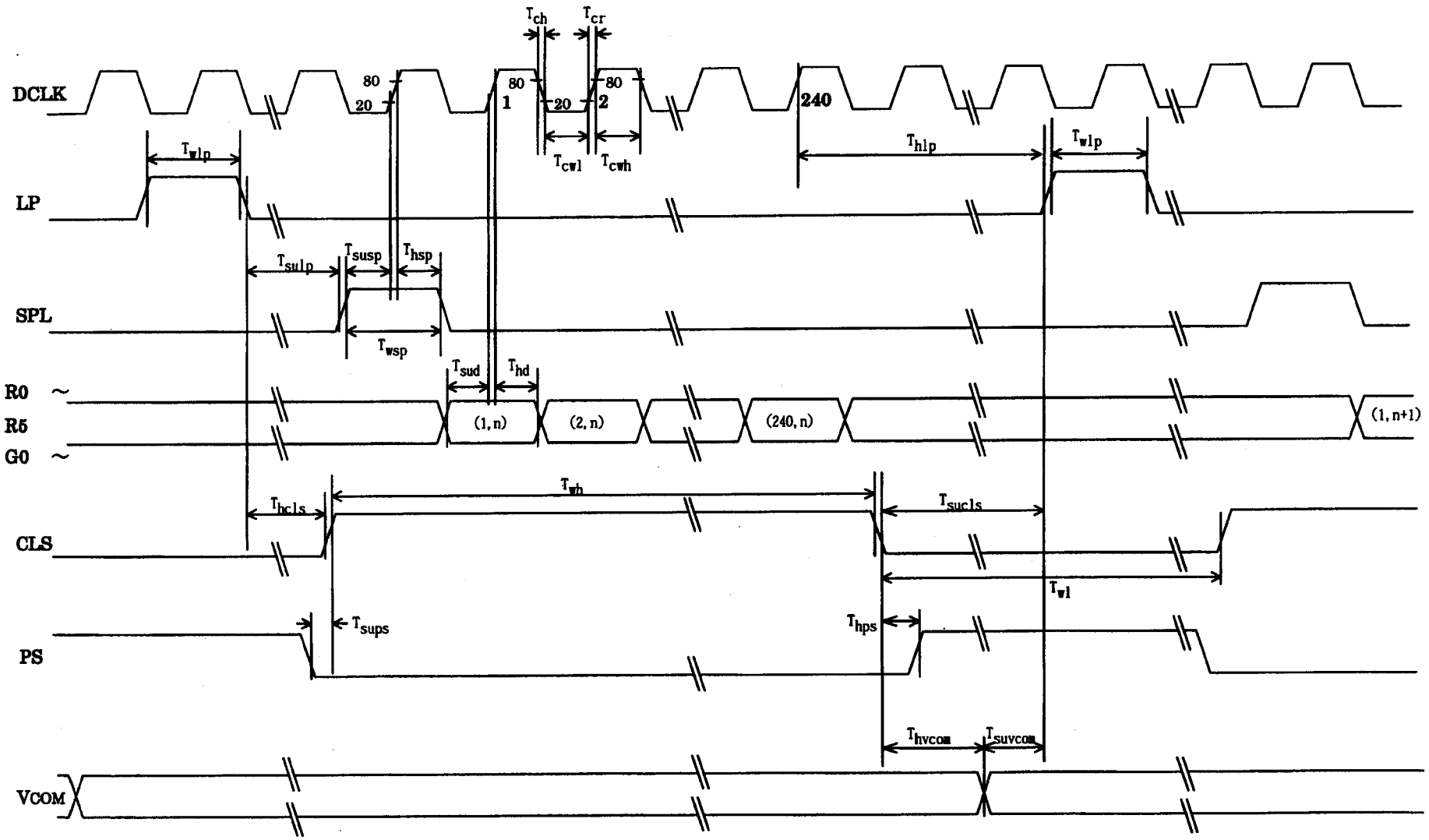


Fig.(a) Horizontal timing chart

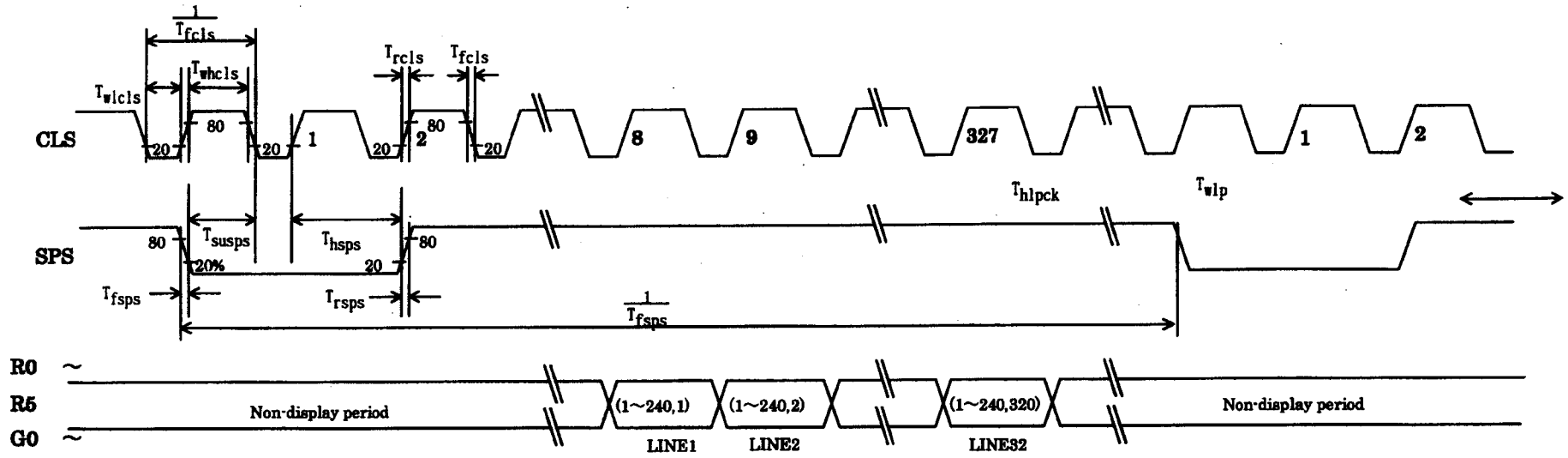


Fig.(b) Vertical timing chart

7-3)Power consumption

Measurement condition : SPS=60Hz,CLS=15.73kHz,SPL=15.73kHz,DCLK=6.3MHz
The term of PS="Lo" in one horizontal period ··· 37 μsec(234DCLK)
Ta=25℃

Table 9 when normal scan mode

| Parameter | | Sym | Conditions | MIN | TYP | MAX | Unit | Remarks |
|---|---|---|---|---|---|---|---|---|
| Source current | Analog | $I_{SHA}$ | $V_{SHA}$=+5.0V | — | 5.0 | 10 | mA | 【Note 7-11】 |
| | Digital | $I_{SHD}$ | $V_{SHD}$=+3.3V | — | 1.8 | 3.6 | mA | 【Note 7-11】 |
| Gate current | High | $I_{DD}$ | $V_{DD}$=+15.0V | — | 0.05 | 0.10 | mA | 【Note 7-12】 |
| | Low | $I_{EE}$ | $V_{EE}$=−9.0±2.5V | — | −0.03 | −0.06 | mA | 【Note 7-12】 |
| | logic High | $I_{CC}$ | $V_{CC}$=−11.7V | — | 0.08 | 0.16 | mA | 【Note 7-12】 |
| | logic Low | $I_{SS}$ | $V_{SS}$=−15.0V | — | −0.18 | −0.36 | mA | 【Note 7-12】 |
| Power consumption | | Pd1 | 【Note 7-14】 | — | 33 | 66 | mW | 【Note 7-11】 |
| | | Pd2 | | — | 25 | 50 | mW | 【Note 7-13】 |

【Note 7-11】 Vertical stripe pattern alternating 21 gray scale (GS21) with 42 gray scale (GS42) every 1 dot.
【Note 7-12】 64-Gray-bar vertical pattern (GS0 ～ GS63 for horizontal way)
【Note 7-13】 all black pattern (GS0)
【Note 7-14】 Voltage conditions
$V_{SHA}$=+5.0V , $V_{SHD}$=+3.3V , $V_{DD}$=+15.0V
$V_{EE}$=−9.0±2.5V , $V_{CC}$=−11.7V , $V_{SS}$=−15.0V

8 .Input Signals, Basic Display Color and Gray Scale of Each Colornn

Table 10

| | Colors & Gray scale | Gray Scale | R0 | R1 | R2 | R3 | R4 | R5 | G0 | G1 | G2 | G3 | G4 | G5 | B0 | B1 | B2 | B3 | B4 | B5 |
|---|---|---|---|---|---|---|---|---|---|---|---|---|---|---|---|---|---|---|---|---|
| | | | Data signal | | | | | | | | | | | | | | | | | |
| Basic color | Black | — | 0 | 0 | 0 | 0 | 0 | 0 | 0 | 0 | 0 | 0 | 0 | 0 | 0 | 0 | 0 | 0 | 0 | 0 |
| | Blue | — | 0 | 0 | 0 | 0 | 0 | 0 | 0 | 0 | 0 | 0 | 0 | 0 | 1 | 1 | 1 | 1 | 1 | 1 |
| | Green | — | 0 | 0 | 0 | 0 | 0 | 0 | 1 | 1 | 1 | 1 | 1 | 1 | 0 | 0 | 0 | 0 | 0 | 0 |
| | Cyan | — | 0 | 0 | 0 | 0 | 0 | 0 | 1 | 1 | 1 | 1 | 1 | 1 | 1 | 1 | 1 | 1 | 1 | 1 |
| | Red | — | 1 | 1 | 1 | 1 | 1 | 1 | 0 | 0 | 0 | 0 | 0 | 0 | 0 | 0 | 0 | 0 | 0 | 0 |
| | Magenta | — | 1 | 1 | 1 | 1 | 1 | 1 | 0 | 0 | 0 | 0 | 0 | 0 | 1 | 1 | 1 | 1 | 1 | 1 |
| | Yellow | — | 1 | 1 | 1 | 1 | 1 | 1 | 1 | 1 | 1 | 1 | 1 | 1 | 0 | 0 | 0 | 0 | 0 | 0 |
| | White | — | 1 | 1 | 1 | 1 | 1 | 1 | 1 | 1 | 1 | 1 | 1 | 1 | 1 | 1 | 1 | 1 | 1 | 1 |
| Gray Scale of red | Black | GS0 | 0 | 0 | 0 | 0 | 0 | 0 | 0 | 0 | 0 | 0 | 0 | 0 | 0 | 0 | 0 | 0 | 0 | 0 |
| | ⇧ | GS1 | 1 | 0 | 0 | 0 | 0 | 0 | 0 | 0 | 0 | 0 | 0 | 0 | 0 | 0 | 0 | 0 | 0 | 0 |
| | Darker | GS2 | 0 | 1 | 0 | 0 | 0 | 0 | 0 | 0 | 0 | 0 | 0 | 0 | 0 | 0 | 0 | 0 | 0 | 0 |
| | ⇧ | ↓ | | | | ↓ | | | | | | ↓ | | | | | | ↓ | | |
| | ⇩ | ↓ | | | | ↓ | | | | | | ↓ | | | | | | ↓ | | |
| | Brighter | GS61 | 1 | 0 | 1 | 1 | 1 | 1 | 0 | 0 | 0 | 0 | 0 | 0 | 0 | 0 | 0 | 0 | 0 | 0 |
| | ⇩ | GS62 | 0 | 1 | 1 | 1 | 1 | 1 | 0 | 0 | 0 | 0 | 0 | 0 | 0 | 0 | 0 | 0 | 0 | 0 |
| | Red | GS63 | 1 | 1 | 1 | 1 | 1 | 1 | 0 | 0 | 0 | 0 | 0 | 0 | 0 | 0 | 0 | 0 | 0 | 0 |
| Gray Scale of green | Black | GS0 | 0 | 0 | 0 | 0 | 0 | 0 | 0 | 0 | 0 | 0 | 0 | 0 | 0 | 0 | 0 | 0 | 0 | 0 |
| | ⇧ | GS1 | 0 | 0 | 0 | 0 | 0 | 0 | 1 | 0 | 0 | 0 | 0 | 0 | 0 | 0 | 0 | 0 | 0 | 0 |
| | Darker | GS2 | 0 | 0 | 0 | 0 | 0 | 0 | 0 | 1 | 0 | 0 | 0 | 0 | 0 | 0 | 0 | 0 | 0 | 0 |
| | ⇧ | ↓ | | | | ↓ | | | | | | ↓ | | | | | | ↓ | | |
| | ⇩ | ↓ | | | | ↓ | | | | | | ↓ | | | | | | ↓ | | |
| | Brighter | GS61 | 0 | 0 | 0 | 0 | 0 | 0 | 1 | 0 | 1 | 1 | 1 | 1 | 0 | 0 | 0 | 0 | 0 | 0 |
| | ⇩ | GS62 | 0 | 0 | 0 | 0 | 0 | 0 | 0 | 1 | 1 | 1 | 1 | 1 | 0 | 0 | 0 | 0 | 0 | 0 |
| | Green | GS63 | 0 | 0 | 0 | 0 | 0 | 0 | 1 | 1 | 1 | 1 | 1 | 1 | 0 | 0 | 0 | 0 | 0 | 0 |
| Gray Scale of bleu | Black | GS0 | 0 | 0 | 0 | 0 | 0 | 0 | 0 | 0 | 0 | 0 | 0 | 0 | 0 | 0 | 0 | 0 | 0 | 0 |
| | ⇧ | GS1 | 0 | 0 | 0 | 0 | 0 | 0 | 0 | 0 | 0 | 0 | 0 | 0 | 1 | 0 | 0 | 0 | 0 | 0 |
| | Darker | GS2 | 0 | 0 | 0 | 0 | 0 | 0 | 0 | 0 | 0 | 0 | 0 | 0 | 0 | 1 | 0 | 0 | 0 | 0 |
| | ⇧ | ↓ | | | | ↓ | | | | | | ↓ | | | | | | ↓ | | |
| | ⇩ | ↓ | | | | ↓ | | | | | | ↓ | | | | | | ↓ | | |
| | Brighter | GS61 | 0 | 0 | 0 | 0 | 0 | 0 | 0 | 0 | 0 | 0 | 0 | 0 | 1 | 0 | 1 | 1 | 1 | 1 |
| | ⇩ | GS62 | 0 | 0 | 0 | 0 | 0 | 0 | 0 | 0 | 0 | 0 | 0 | 0 | 0 | 1 | 1 | 1 | 1 | 1 |
| | Bleu | GS63 | 0 | 0 | 0 | 0 | 0 | 0 | 0 | 0 | 0 | 0 | 0 | 0 | 1 | 1 | 1 | 1 | 1 | 1 |

0 :Low level voltage 1 :High level voltage

Each basic color can be displayed in 64 gray scales from 6 bit data signals. According to the combination of total 18 bit data signals, the 262,144-color display can be achieved on the screen.

(9)Optical characteristics

9-1)Not driving the Back light condition

Table 12 Ta=25°C

| Parameter | | Symbol | Condition | Min | Typ | Max | Unit | Remarks |
|---|---|---|---|---|---|---|---|---|
| Viewing angle Range | | θ21,22 | CR≥2 | 40 | 50 | — | degree | [Note 9-1,2] |
| | | θ11 | | 40 | 50 | — | degree | |
| | | θ12 | | 40 | 50 | — | degree | |
| Contrast ratio | | CRmax | θ =0° | 4 | 8 | — | | [Note 9-2,5] |
| Response Time | Rise | τr | θ =0° | — | 30 | 60 | ms | [Note 9-4] |
| | Fall | τd | | — | 50 | 100 | ms | |
| Color chromaticity | | White - x | θ =0° | 0.25 | 0.30 | 0.35 | | [Note 9-5] |
| | | White - y | | 0.28 | 0.33 | 0.38 | | |
| | | Red - x | | 0.34 | 0.39 | 0.44 | | |
| | | Red - y | | 0.25 | 0.31 | 0.35 | | |
| | | Green - x | | 0.25 | 0.30 | 0.35 | | |
| | | Green - y | | 0.34 | 0.39 | 0.44 | | |
| | | Blue - x | | 0.15 | 0.20 | 0.25 | | |
| | | Blue - y | | 0.21 | 0.26 | 0.31 | | |
| Reflection ratio | | R | θ =0° | 7 | 11 | — | % | [Note 9-5,6] |

* The measuring method of the optical characteristics is shown by the following figure.

* A measurement device is Otsuka luminance meter LCD5200.(With the diffusion reflection unit.)

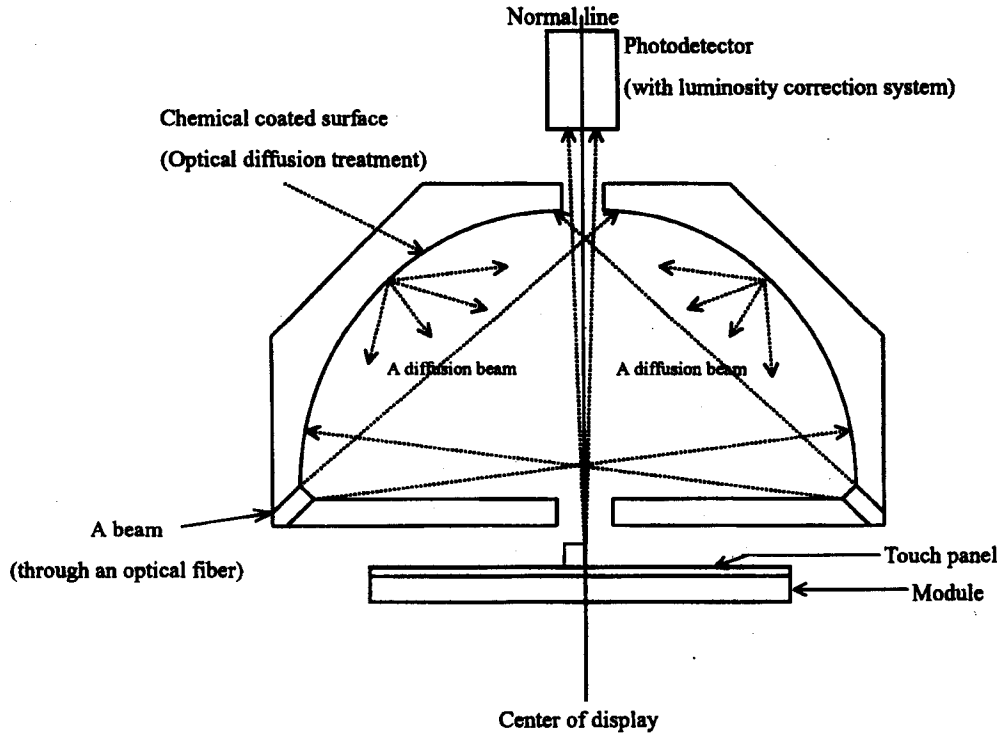


**Measuring method (a) for optical characteristics**

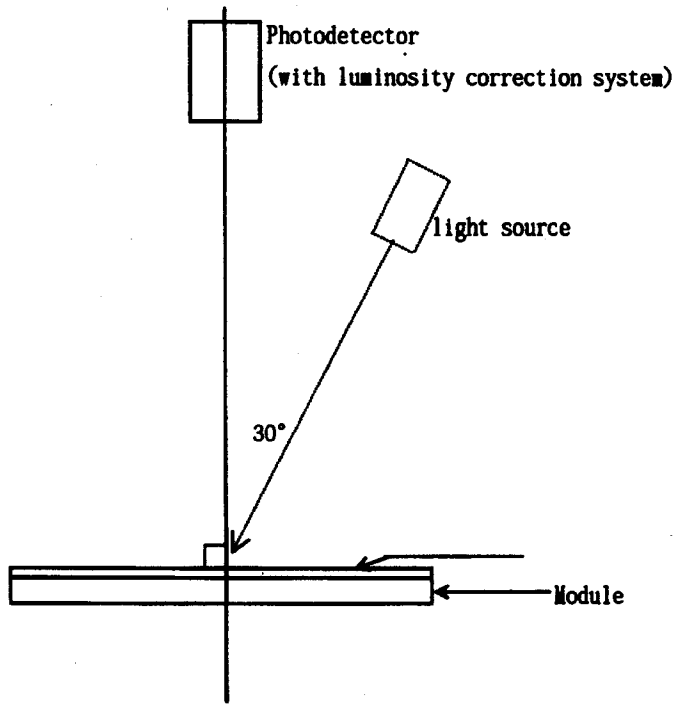


Measuring method (b) for optical characteristics

9-2)Driving the Back light condition

Table 13 Ta=25°C

| Parameter | | Symbol | Condition | Min | Typ | Max | Unit | Remarks |
|---|---|---|---|---|---|---|---|---|
| Viewing angle range | | θ21,22 | CR≥2 | 30 | 40 | — | degree | [Note 9-1,2] |
| | | θ11 | | 30 | 40 | — | degree | |
| | | θ12 | | 30 | 40 | — | degree | |
| Contrast ratio | | Crmax | θ = 0° | 40 | 75 | — | | [Note 9-2] |
| Response time | Rise | τr | | — | 30 | 60 | ms | [Note 9-4] |
| | Fall | τd | | — | 50 | 100 | ms | |
| Color chromaticity | | White - x | θ = 0° | 0.25 | 0.30 | 0.35 | | |
| | | White - y | | 0.27 | 0.32 | 0.37 | | |
| | | Red - x | | 0.43 | 0.48 | 0.53 | | |
| | | Red - y | | 0.27 | 0.32 | 0.37 | | |
| | | Green - x | | 0.26 | 0.31 | 0.36 | | |
| | | Green - y | | 0.38 | 0.43 | 0.48 | | |
| | | Blue - x | | 0.11 | 0.16 | 0.21 | | |
| | | Blue - y | | 0.15 | 0.20 | 0.25 | | |
| Brightness | | Y | θ = 0° | 75 | 90 | — | cd/m² | $I_L$=20mA |
| Lamp life time | | LL | $I_L$=20mA | 10000 | — | — | hour | [Note 9-7] |
| Uniformity | | — | — | 75 | 85 | — | % | [Note 9-8] |

* The measuring method of the optical characteristics is shown by the following figure.

* A measurement device is TOPCON luminance meter BM-5(A).(Viewing cone 1)

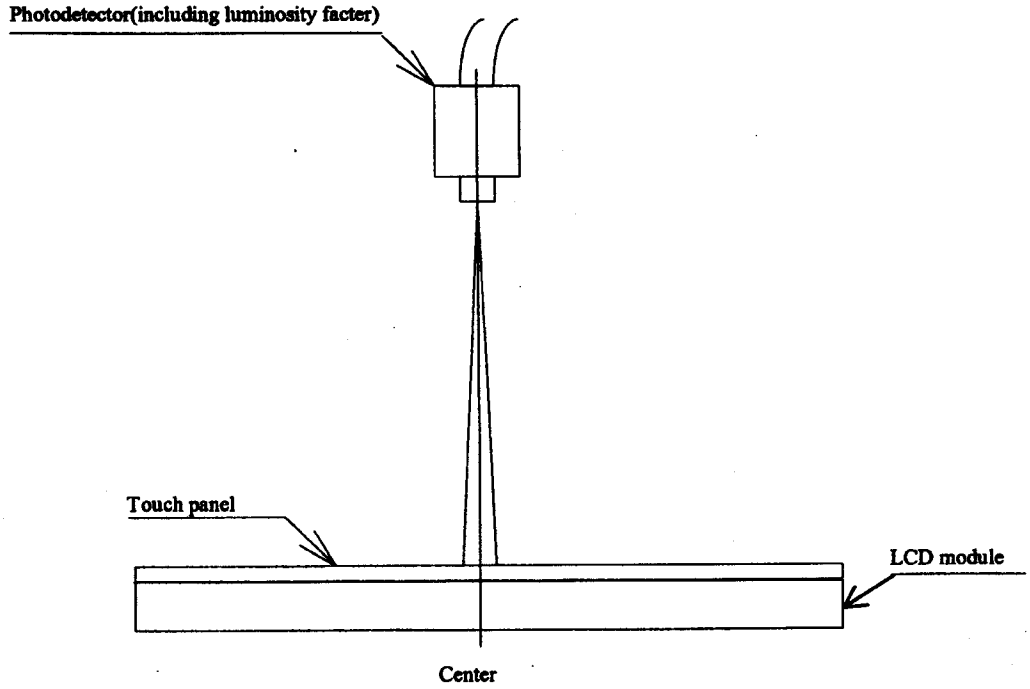


**Measuring method (c) for optical characteristics**

[Note 9-1] Viewing angle range is defined as follows.

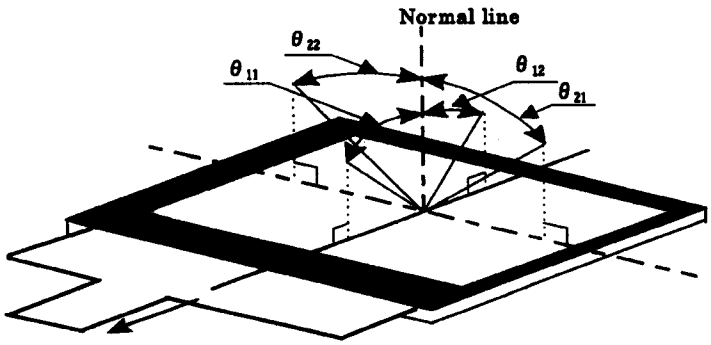


6 o'clock direction

**Definition for viewing angle**

[Note 9-2] Definition of contrast ratio:

The contrast ratio is defined as follows:

$$\text{Contrast ratio(CR)} = \frac{\text{Photodetecter output with all pixels white(GS63)}}{\text{Photodetecter output with all pixels black(GS0)}}$$

$V_{COMAC}$=5.0Vp-p,V0=4.0Vp-p,V4=-4.0Vp-p

[Note 9-3] These values are under the condition of measuring method(b) with a point light source (lighting angle = 30° ).

[Note 9-4] Definition of response time:

The response time is defined as the following figure and shall be measured by switching the input signal for "black" and "white".

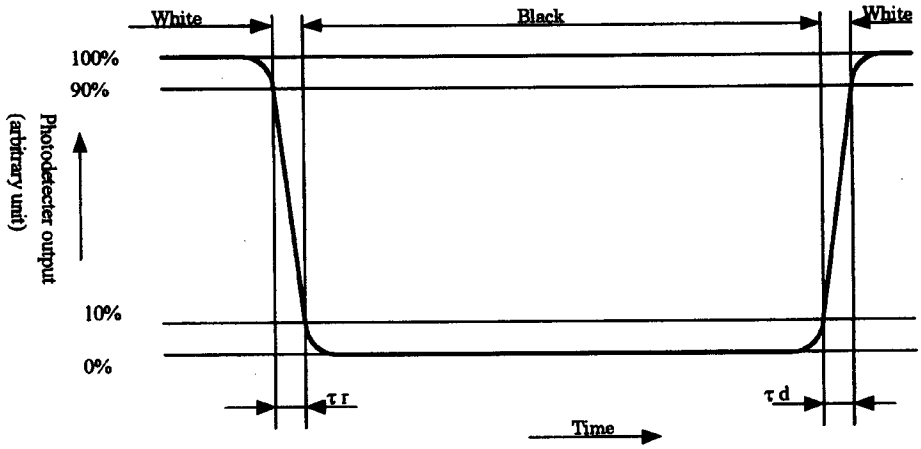

[Note 9-5] A measurement device is Minolta CM-2002.

[Note 9-6] Definition of reflection ratio

$$\text{Reflection ratio} = \frac{\text{Light detected level of the reflection by the LCD module}}{\text{Light detected level of the reflection by the standard white board}}$$

[Note 9-7] The White-LED life time is defined as a time when brightness not to become under 50% of the original value.(at Ta=25℃)

[Note 9-8] Definition of Uniformity

$$\text{Uniformity} = \frac{\text{Minimum brightness}}{\text{Maximum brightness}} \times 100\ (\%)$$

The brightness should be measured on 9spots of the display as follows.

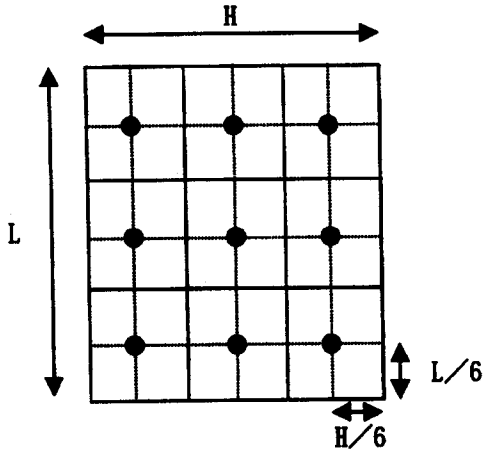


(10)Display quality

The display quality of the color TFT-LCD module shall be in compliance with the Incoming Inspection Standards for TFT-LCD..

(11)Mechanical characteristics

11-1) External appearance

See Fig. 1

11-2) FPC (for LCD panel) characteristics

(1) Specific connector

Hirose FH23-61S-0.3SHAW(05)

(2) Bending endurance of the bending slits portion

No line of the FPC is broken for the bending test (Bending radius=0.6mm and angle=90°) in 30 cycles.

(12)Handling Precautions

12-1) Insertion and taking out of FPCs

Be sure insert and take out of the FPC into the connector of the set after turning off the power supply on the set side.

12-2) Handling of FPCs

The FPC for LCD panel shall be bent only slit portion. The bending slit shall be bent uniformly on the whole slit portion with bending radius larger than 0.6mm ,and only inner side (back side of the module). Don't bend it outer side (display surface side).

Don't give the FPCs too large force, for example, hanging the module with holding FPC.

12-3) Installation of the module

On mounting the module, be sure to fix the module on the same plane. Taking care not to warp or twist the module.

12-4)Precaution when mounting

(1) If water droplets and oil attaches to it for a long time, discoloration and staining occurs. Wipe them off immediately.

(2) Glass is used for the TFT-LCD panel and touch panel. If it is dropped or bumped against a hard object, it may be broken. Handle it with sufficient care.

(3)As the CMOS IC is used in this module, pay attention to static electricity when handling it. Take a measure for grounding on the human body.

12-5)Others

(1) The liquid-crystal is deteriorated by ultraviolet rays. Do not leave it in direct sunlight and strong ultraviolet rays for many hours.

(2) If it is kept at a temperature below the rated storage temperature, it becomes coagulated and the panel may be broken. Also, if it is kept at a temperature above the rated storage temperature, it becomes isotropic liquid and does not return to its original state. Therefore, it is desirable to keep it at room temperature as much as possible.

(3) If the LCD breaks, don't put internal liquid crystal into the mouth. When the liquid crystal sticks to the hands, feet and clothes, wash it out immediately.

(4) Wipe off water drop or finger grease immediately. Long contact with water may cause discoloration or spots.

(5) Observe general precautions for all electronic components.

(6) VCOM must be adjusted on condition of your final product. No adjustment causes the deterioration for display quality.

(7) Static image should not be displayed more than 5 minutes in order to prevent from occurrence of residual image.

(13)Reliability Test Conditions for TFT-LCD Module

Table 14

| No. | Test items | Test conditions |
|---|---|---|
| 1 | High temperature storage test | Ta=+60℃ 240h |
| 2 | Low temperature storage test | Ta=－20℃ 240h |
| 3 | High temperature and high humidity operating test | Tp=+40℃ , 95%RH 240h<br>(But no condensation of dew) |
| 4 | High temperature operating test | Tp=+50℃ 240h |
| 5 | Low temperature operating test | Tp=0℃ 240h |
| 6 | Electro static discharge test | ±200V・200pF(0Ω) 1 time for each terminals |
| 7 | Shock tset | 980 m/s$^2$, 6 ms<br>±X,±Y,±Z 3 times for each direction<br>(JIS C0041, A-7 Condition C) |
| 8 | Vibration test | Frequency range: 10Hz～55Hz<br>Stroke: 1.5 mm Sweep: 10Hz～55Hz<br>X,Y,Z 2 hours for each direction (total 6 hours)<br>(JIS C0040,A-10 Condition A) |
| 9 | Heat shock test | Ta=-25℃～+70℃ / 5 cycles<br>(1h) (1h) |

【Note】 Ta = Ambient temperature, Tp = Panel temperature

【Check items】 In the standard condition, there shall be no practical problems that may affect the display function.

(14) Others

14-1)Indication of lot number

The lot number is shown on a label. Attached location is shown in Fig.1 (Outline Dimensions).

Indicated contents of the label

| LQ038Q7DB03 | ○○○○○○○○ |
|---|---|
| model No. | lot No. |

14-2) Used Regulation of Chemical Substances Breaking Ozone Stratum

Substances with the object of regulating : CFCS, Carbon tetrachloride, Halon
1,1,1-Trichloro ethane (Methyl chloroform)

(a) This LCD module, Constructed part and Parts don't contain the above substances.

(b) This LCD module, Constructed part and Parts don't contain the above substances in processes of manufacture.

14-3) If some problems arise about mentioned items in this document and other items, the user of the TFT-LCD module and Sharp will cooperate and make efforts to solve the problems with mutual respect and good will.

SHARP

Unit is mm

CONFIDENTIAL

TENTATIVE

| NOTE. |
|---|
| This drawing still tentative. because we are under development. There may be changes of this drawing in future. |

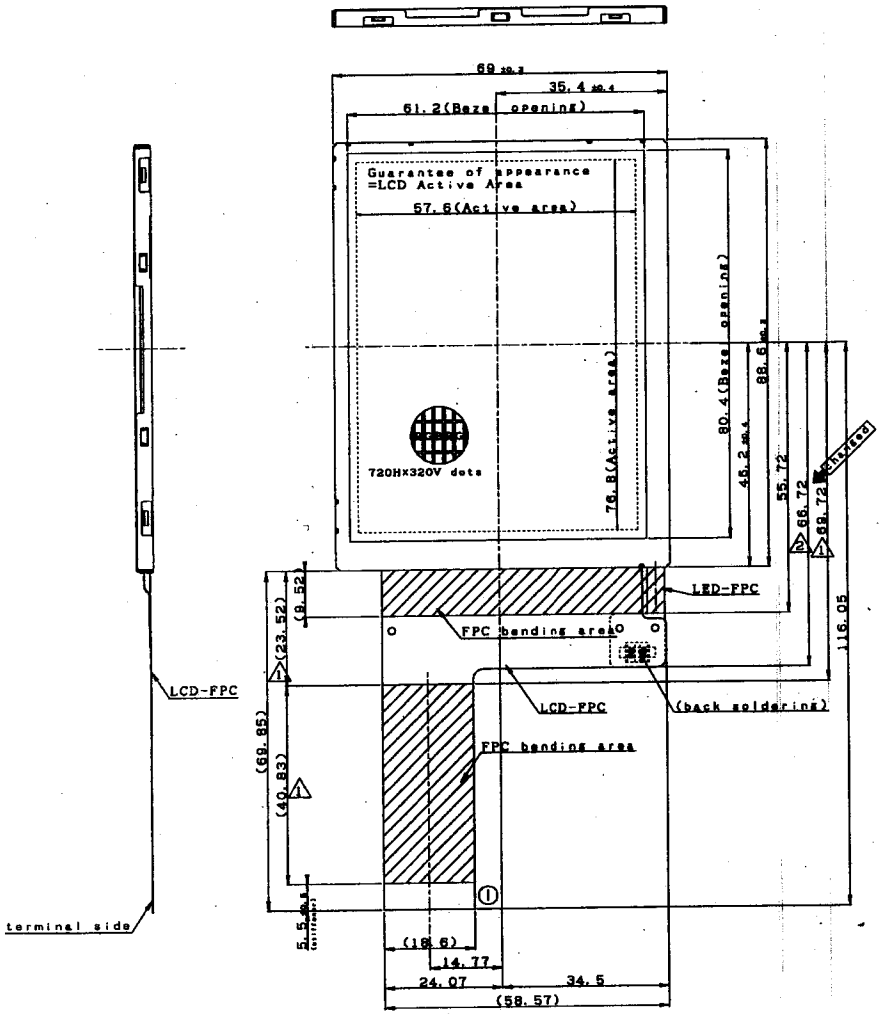


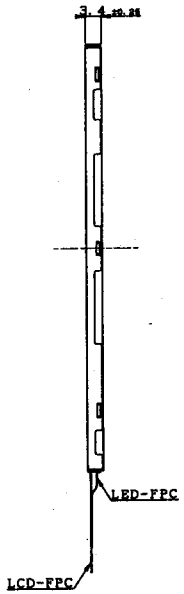


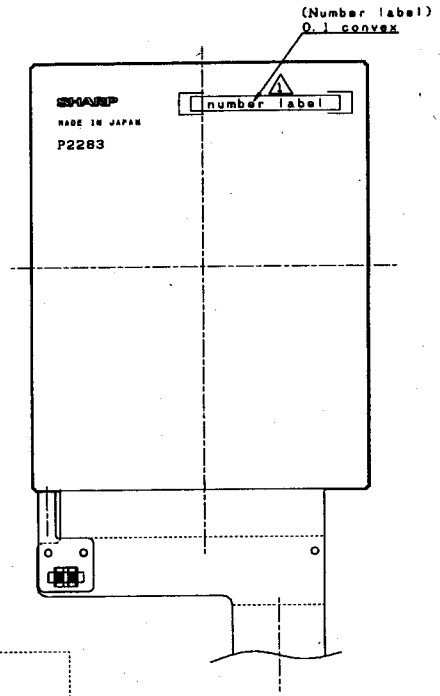


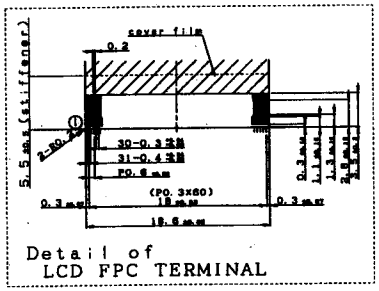


Detail of LCD FPC TERMINAL

Fitting CN:Hirose FH23-61S-0.3SHAW(05)

·General tolerance is ±0.5
·LCD-FPC should bended only bending area.
·LCD/LED-FPC bend larger than 0.6 in radius.
·Take care in set design to hide the scratches and bubbles appeared on the polarizer or other frame area which is located outside of guarantee area.
·The tolerance of module width are exclude warp of case.

| | | | | | |
|---|---|---|---|---|---|
| 5 | | | | ORIGINAL MODEL | LQ038Q7DB03 |
| 4 | | | | 画面サイズ ACTIVE AREA SIZE | 96mm(3.8") |
| 3 | | | | | 0.24mm 240RGBx320 |
| 2 | 03.4.22 | FPC size modification | TM | 尺度 SCALE 1/1 | 日付 DATE 12.DEC.2002 |
| 1 | 03.3.4 | FPC size modification | TM | 単位 Unit mm | 名称 NAME Outline Dimensions |
| 改訂日 | | 改訂記事 REVISION | 担当 | | ユーザー USER |
| 設計 DESIGNER | 製図 DRAFTER | 検図 DSN CK / 検図 DSN CK / 承認 ENG APPD | シャープ株式会社 モバイル液晶事業本部設計C第1開発部 | | |
| T. Matsumoto | | | SHARP CORPORATION | 原紙サイズ A3 | 図番 DRAWING NO LDM-29131C |

SHARP

Unit is mm

CONFIDENTIAL

TENTATIVE

**NOTE.**
This drawing still tentative.
because we are under development.
There may be changes of this
drawing in future.

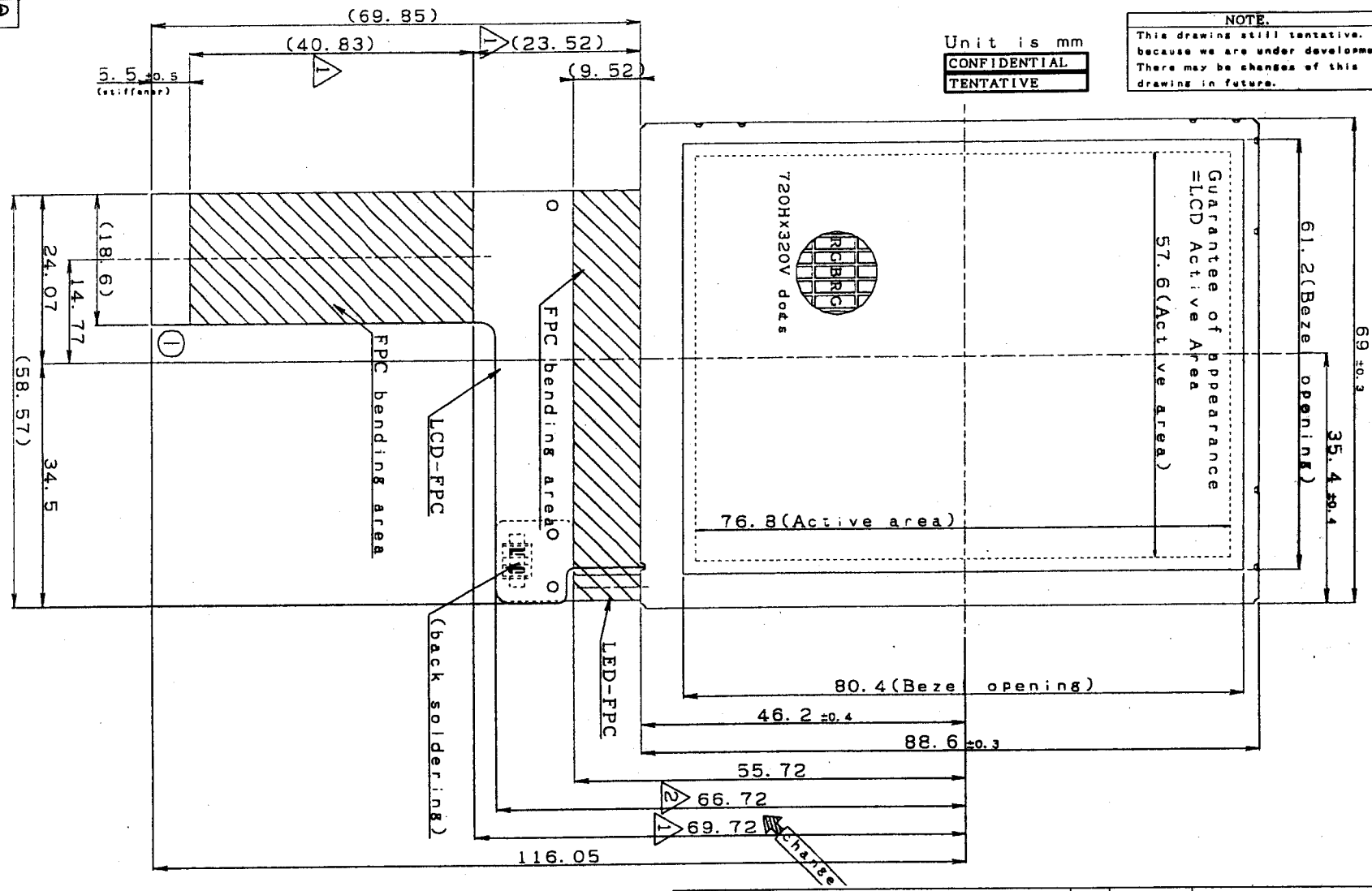


- General tolerance is ±0.5
- LCD-FPC should bended only bending area.
- LCD/LED-FPC bend larger than 0.6 in radius.
- Take care in set design to hide the scratches and bubbles appeared on the polarizer or other frame area which is located outside of guarantee area.
- The tolerance of module width are exclude warp of case.

| 改訂日 | 改訂記事 REVISION | 担当 |
|---|---|---|
| 5 | | |
| 4 | | |
| 3 | | |
| 2 03.4.22 | FPC size modification | TM |
| 1 03.3.4 | FPC size modification | TM |

| | | | |
|---|---|---|---|
| 設計 DESIGNER | 製図 DRAFTER | 検図 DSN CK | 検図 DSN CK | 承認 DWG APPR |
| T. Matsumoto | | | | |

シャープ株式会社
モバイル液晶事業本部設計C第1開発部
SHARP CORPORATION

| | |
|---|---|
| ORIGINAL MODEL | LQ038Q7DB03 |
| 画面サイズ ACTIVE AREA SIZE | 96mm(3.8") 0.24mm 240RGB×320 |
| 尺度 SCALE | 1/1 |
| 日付 DATE | 12. DEC. 2002 |
| 単位 Unit | mm |
| 名称 NAME | Outline Dimensions |
| ユーザー USER | |
| 原紙サイズ | A3 |
| 図番 DRAWING NO | LDM-29131C |

SHARP

Unit is mm

CONFIDENTIAL

TENTATIVE

| NOTE. |
|---|
| This drawing still tentative. because we are under development. There may be changes of this drawing in future. |

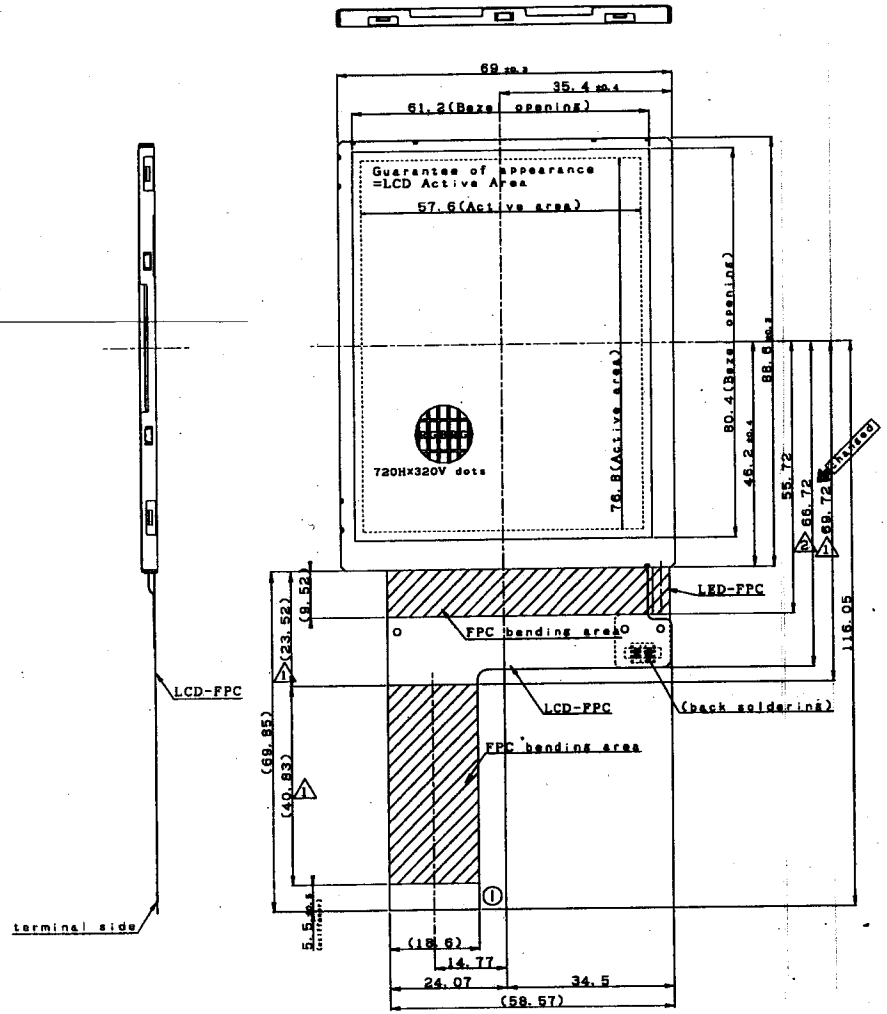


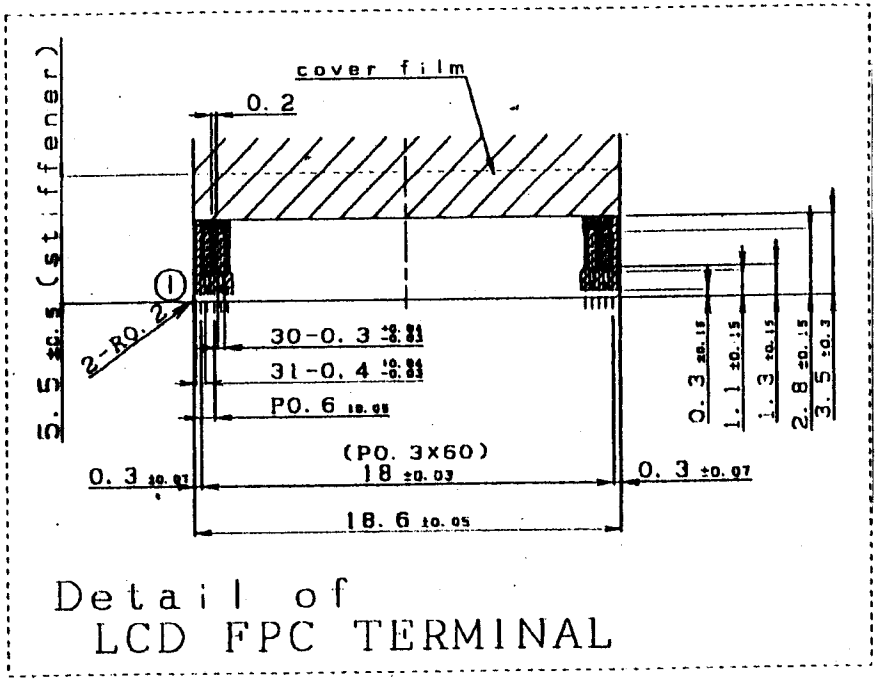


Detail of LCD FPC TERMINAL

Fitting CN:Hirose FH23-61S-0.3SHAW(05)

- General tolerance is ±0.5
- LCD-FPC should bended only bending area.
- LCD/LED-FPC bend larger than 0.6 in radius.
- Take care in set design to hide the scratches and bubbles appeared on the polarizer or other frame area which is located outside of guarantee area.
- The tolerance of module width are exclude warp of case.

| 改訂日 | | 改訂記事 REVISION | 担当 |
|---|---|---|---|
| 6 | | | |
| 4 | | | |
| 3 | | | |
| 2 | 03. 4. 22 | FPC size modification | TM |
| 1 | 03. 3. 4 | FPC size modification | TM |

| 設計 DESIGNER | 製図 DRAFTER | 検図 DSN CK | 検図 DSN CK | 承認 ENG APPD |
|---|---|---|---|---|
| T. Matsumoto | | | | |

シャープ株式会社 モバイル液晶事業本部設計C第1開発部 SHARP CORPORATION

| | |
|---|---|
| ORIGINAL MODEL | LQ038Q7DB03 |
| 画面サイズ ACTIVE AREA SIZE | 96mm(3.8") 0.24mm 240RGBx320 |
| 尺度 SCALE | 1/1 |
| 日付 DATE | 12. DEC. 2002 |
| 単位 Unit | mm |
| 名称 NAME | Outline Dimensions |
| ユーザー USER | |
| 原紙サイズ | A3 |
| 図番 DRAWING NO | LDM-29131C |

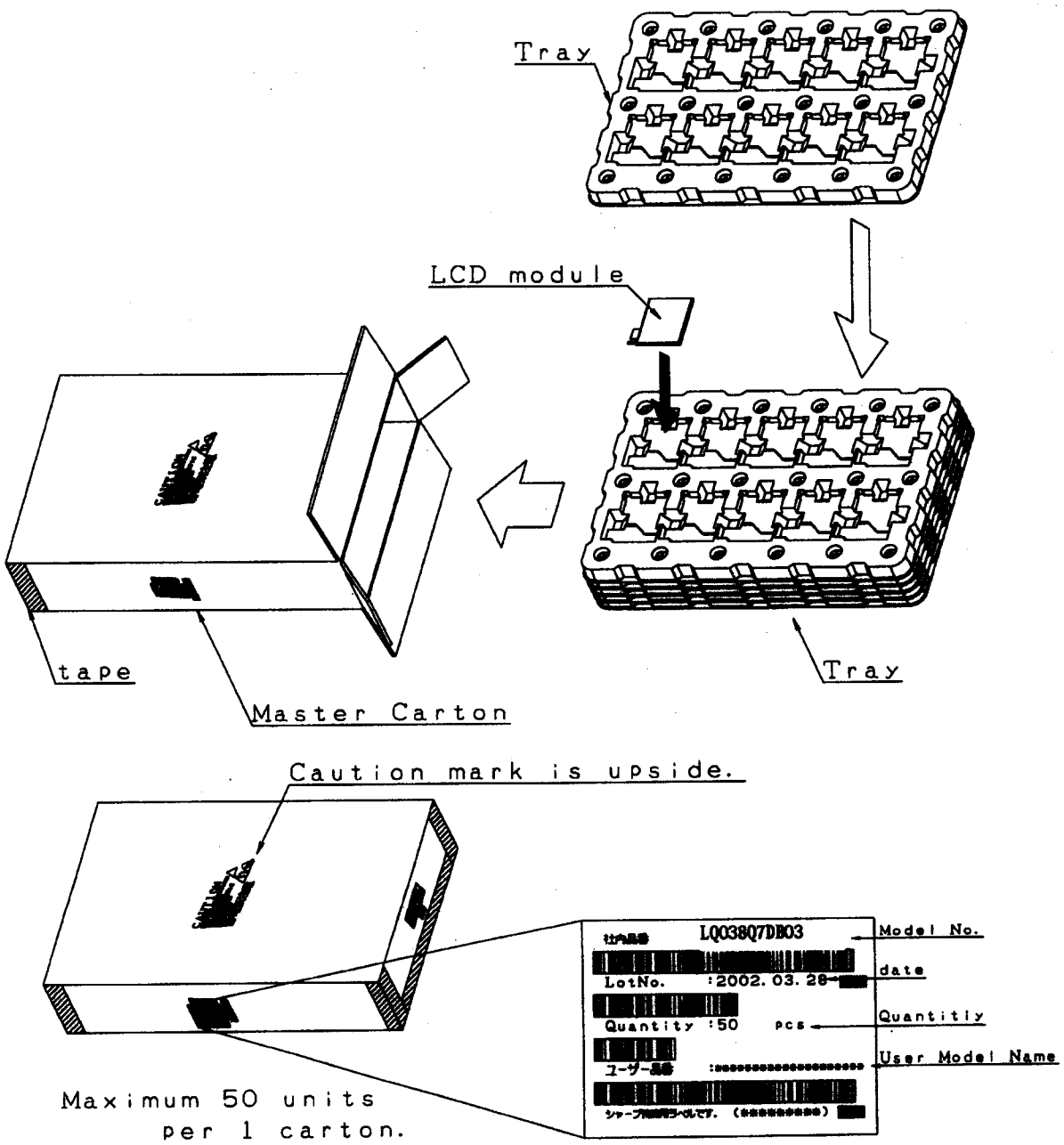
Tray
LCD module
tape
Master Carton
Tray
Caution mark is upside.
LQ038Q7DB03
Model No.
LotNo. :2002. 03. 28
date
Quantity :50 PCS
Quantitly
User Model Name
Maximum 50 units
per 1 carton.