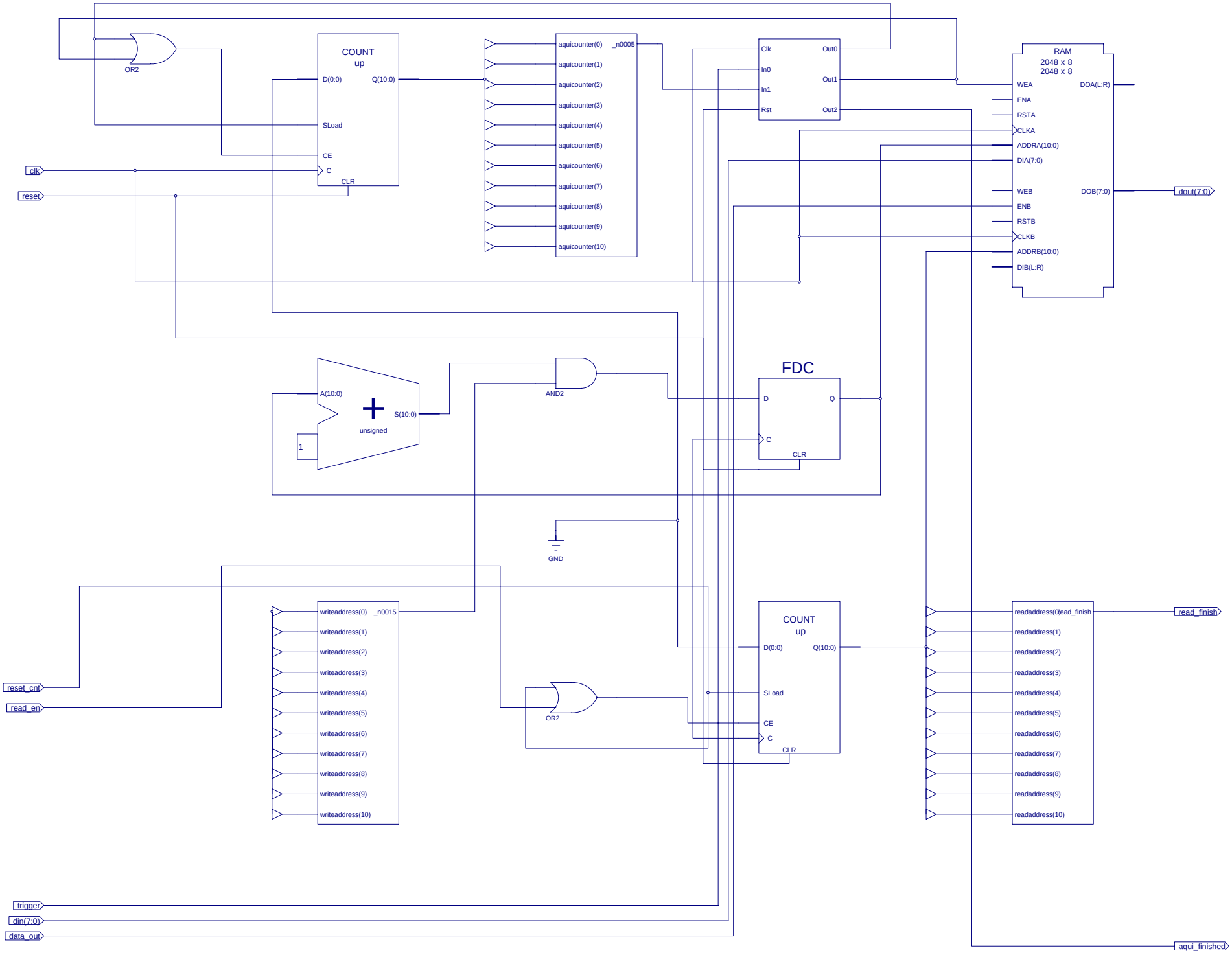
OR2
COUNT
up
D(0:0)
Q(10:0)
SLoad
CE
C
CLR
clk
reset
aquicounter(0)
_n0005
aquicounter(1)
aquicounter(2)
aquicounter(3)
aquicounter(4)
aquicounter(5)
aquicounter(6)
aquicounter(7)
aquicounter(8)
aquicounter(9)
aquicounter(10)
Clk
Out0
In0
Out1
In1
Rst
Out2
RAM
2048 x 8
2048 x 8
WEA
DOA(L:R)
ENA
RSTA
CLKA
ADDRA(10:0)
DIA(7:0)
WEB
DOB(7:0)
ENB
RSTB
CLKB
ADDRB(10:0)
DIB(L:R)
dout(7:0)
A(10:0)
S(10:0)
unsigned
1
AND2
FDC
D
Q
C
CLR
GND
writeaddress(0)
_n0015
writeaddress(1)
writeaddress(2)
writeaddress(3)
writeaddress(4)
writeaddress(5)
writeaddress(6)
writeaddress(7)
writeaddress(8)
writeaddress(9)
writeaddress(10)
reset_cnt
read_en
OR2
COUNT
up
D(0:0)
Q(10:0)
SLoad
CE
C
CLR
readaddress(0)
read_finish
readaddress(1)
readaddress(2)
readaddress(3)
readaddress(4)
readaddress(5)
readaddress(6)
readaddress(7)
readaddress(8)
readaddress(9)
readaddress(10)
read_finish
trigger
din(7:0)
data_out
aqui_finished