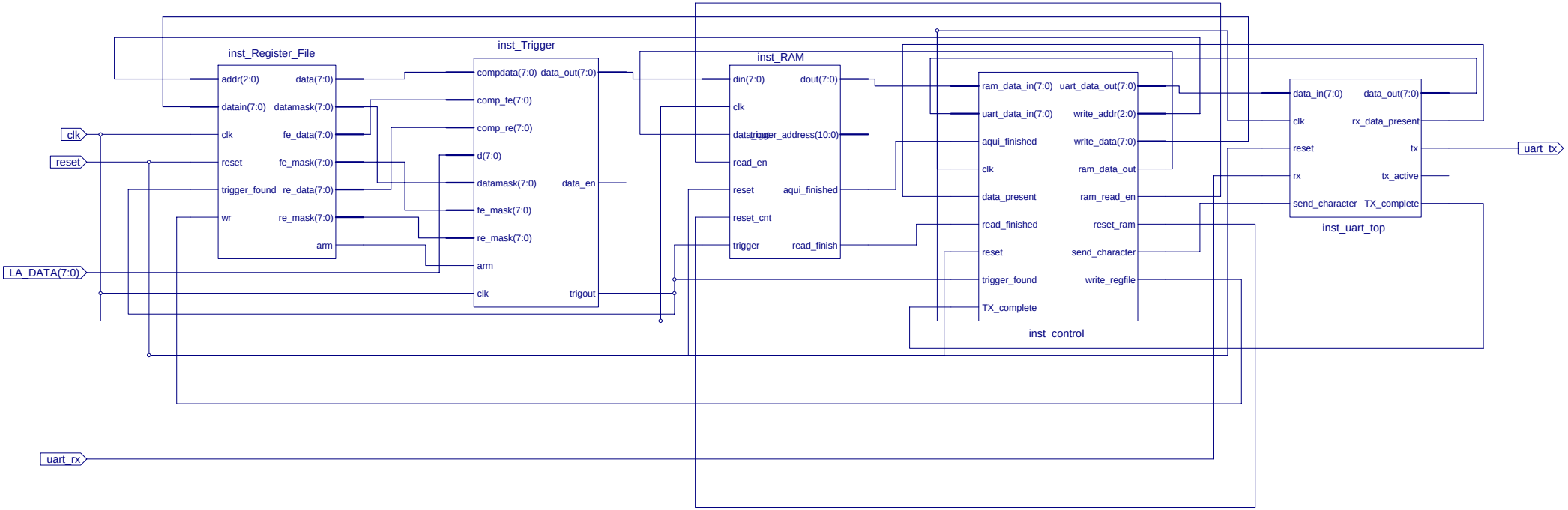
inst_Register_File
addr(2:0)
datain(7:0)
clk
reset
trigger_found
wr
data(7:0)
datamask(7:0)
fe_data(7:0)
fe_mask(7:0)
re_data(7:0)
re_mask(7:0)
arm
inst_Trigger
compdata(7:0)
comp_fe(7:0)
comp_re(7:0)
d(7:0)
datamask(7:0)
fe_mask(7:0)
re_mask(7:0)
arm
clk
data_out(7:0)
data_en
trigout
inst_RAM
din(7:0)
clk
datatrigger
read_en
reset
reset_cnt
trigger
dout(7:0)
trigger_address(10:0)
aqui_finished
read_finish
ram_data_in(7:0)
uart_data_in(7:0)
aqui_finished
clk
data_present
read_finished
reset
trigger_found
TX_complete
uart_data_out(7:0)
write_addr(2:0)
write_data(7:0)
ram_data_out
ram_read_en
reset_ram
send_character
write_regfile
inst_control
data_in(7:0)
clk
reset
rx
send_character
data_out(7:0)
rx_data_present
tx
tx_active
TX_complete
inst_uart_top
clk
reset
LA_DATA(7:0)
uart_rx
uart_tx