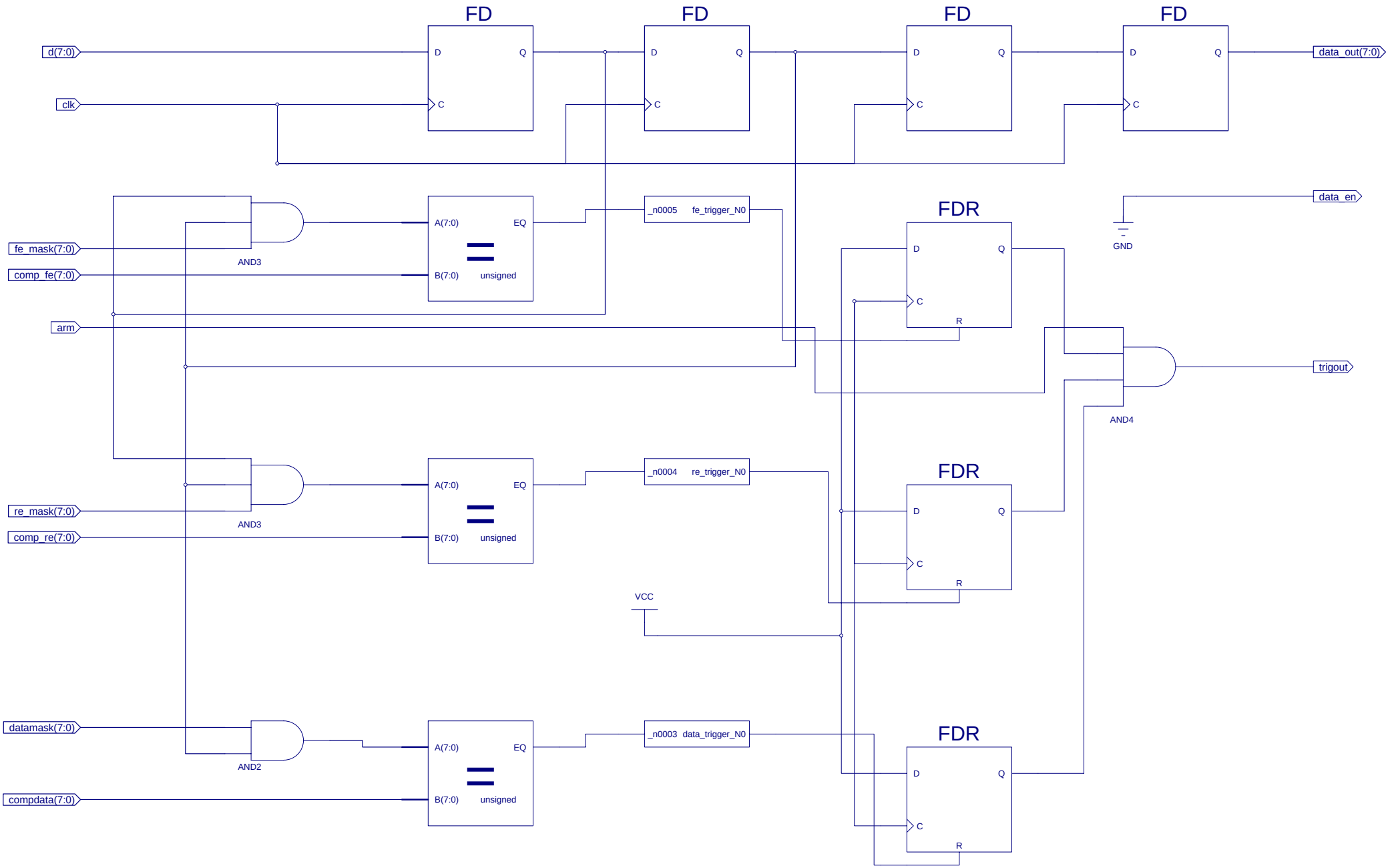
FD
FD
FD
FD
d(7:0)
clk
D
Q
C
data_out(7:0)
fe_mask(7:0)
comp_fe(7:0)
arm
AND3
A(7:0)
B(7:0)
EQ
unsigned
_n0005 fe_trigger_N0
FDR
R
data_en
GND
trigout
AND4
re_mask(7:0)
comp_re(7:0)
_n0004 re_trigger_N0
VCC
datamask(7:0)
compdata(7:0)
AND2
_n0003 data_trigger_N0