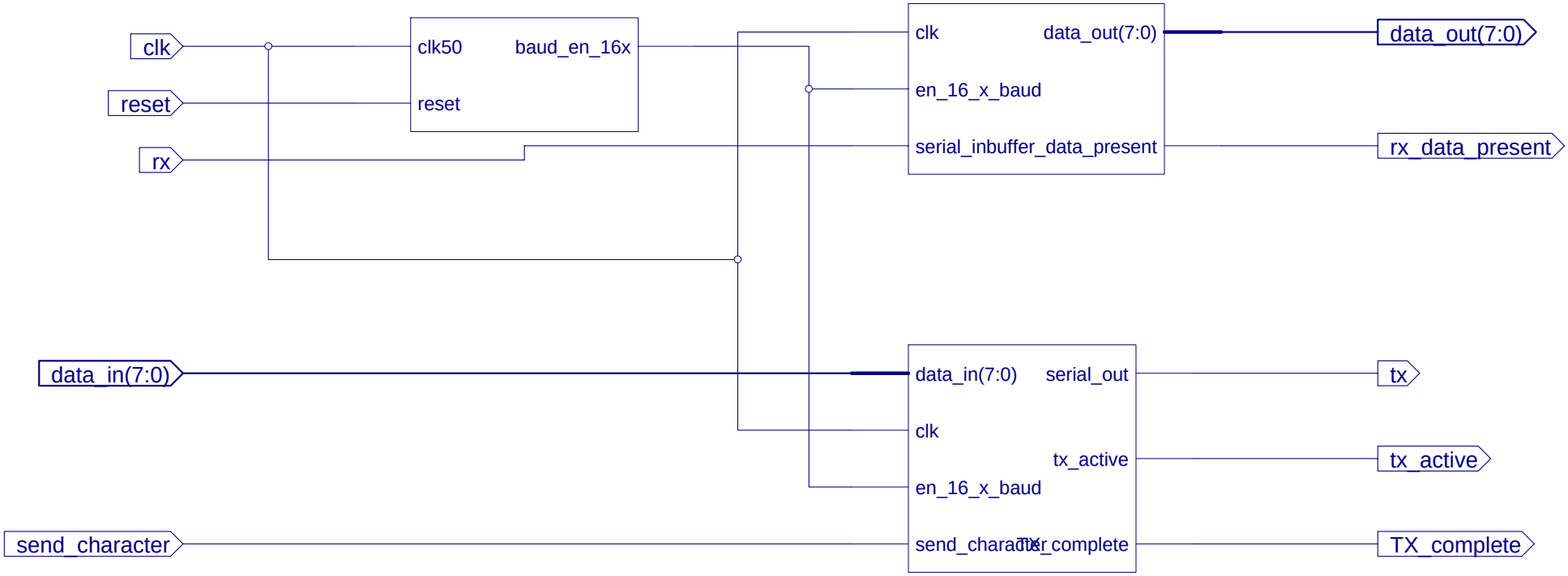
clk
reset
rx
clk50
baud_en_16x
reset
clk
data_out(7:0)
en_16_x_baud
serial_inbuffer_data_present
data_out(7:0)
rx_data_present
data_in(7:0)
data_in(7:0)
serial_out
clk
tx_active
en_16_x_baud
send_character
TX_complete
tx
tx_active
TX_complete