| ZONE | REV. | REVISIONS | DATE | APPROVED |
|---|---|---|---|---|
| | 1 | Initial Drawing Release | 01-JUN-02 | |

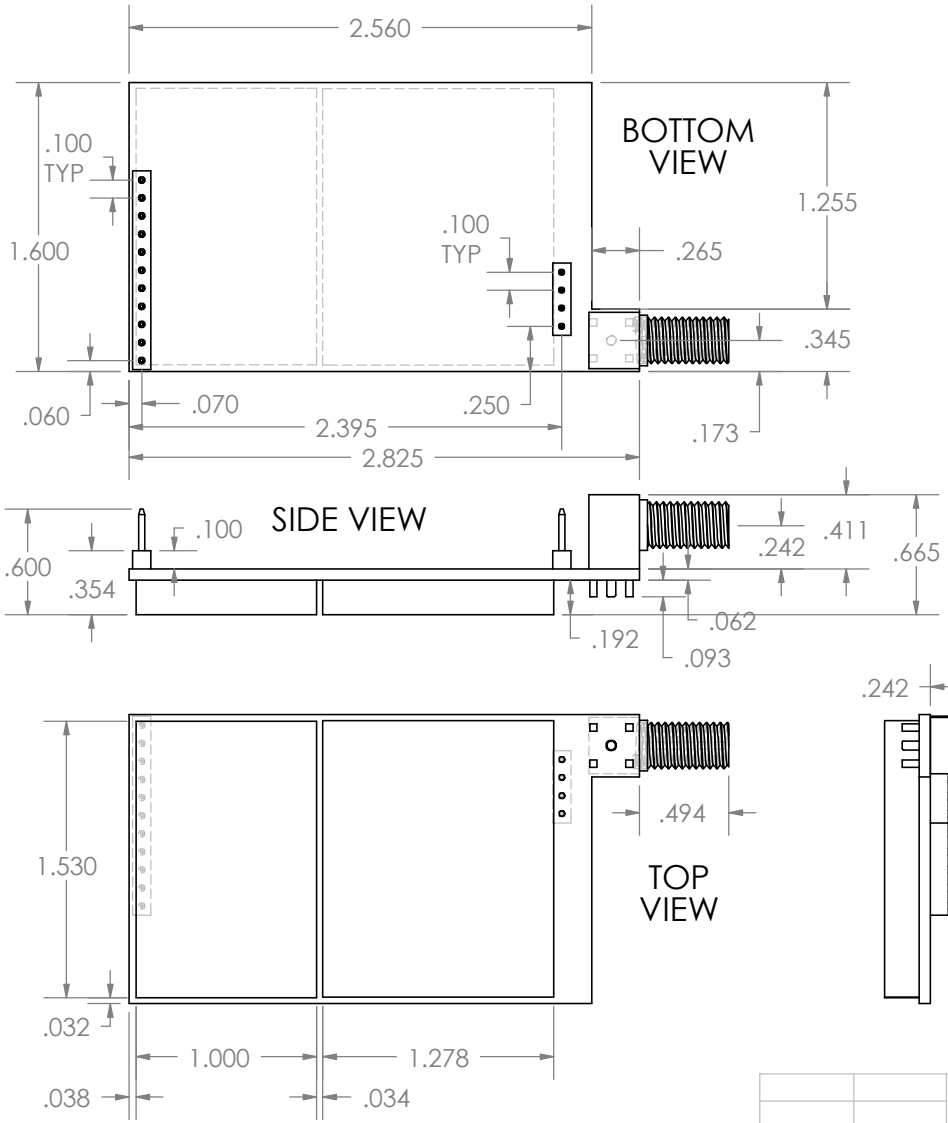


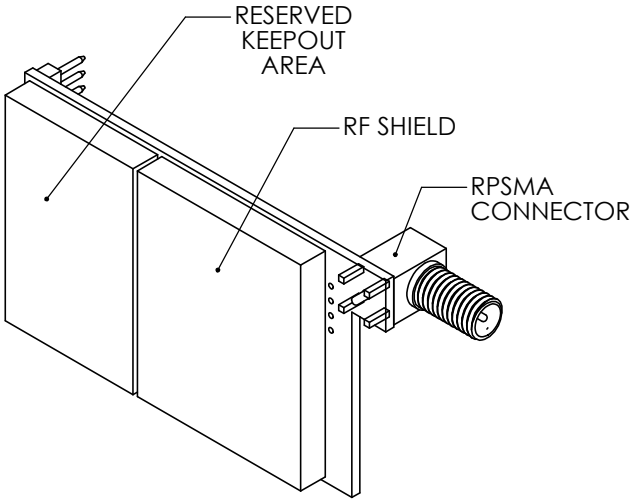


ISOMETRIC VIEW

**PROPRIETARY AND CONFIDENTIAL**

THE INFORMATION CONTAINED IN THIS DRAWING IS THE SOLE PROPERTY OF MaxStream. ANY REPRODUCTION IN PART OR AS A WHOLE WITHOUT THE WRITTEN PERMISSION OF MaxStream IS PROHIBITED.

| NEXT ASSY | USED ON |
|---|---|
| APPLICATION | |

DIMENSIONS ARE IN INCHES
TOLERANCES:
FRACTIONAL ±1/2°
ANGULAR: MACH ± BEND ±1°
TWO PLACE DECIMAL ±.01
THREE PLACE DECIMAL ±.003

MATERIAL

FINISH

| | NAME | DATE |
|---|---|---|
| DRAWN | | 01-JUN-02 |
| CHECKED | | |
| ENG APPR. | | |
| MFG APPR. | | |
| Q.A. | | |

MaxStream

**XCite™ 900 MHz Wireless OEM Module**

| SIZE | DWG. NO. | REV. |
|---|---|---|
| A | M100087 | 1 |

SCALE:1:1 | WEIGHT: 0.8 oz (24G) | SHEET 1 OF 1