# 9XTend Mechanical Drawings

**9XTend OEM RF Module** (with RPSMA Connector)

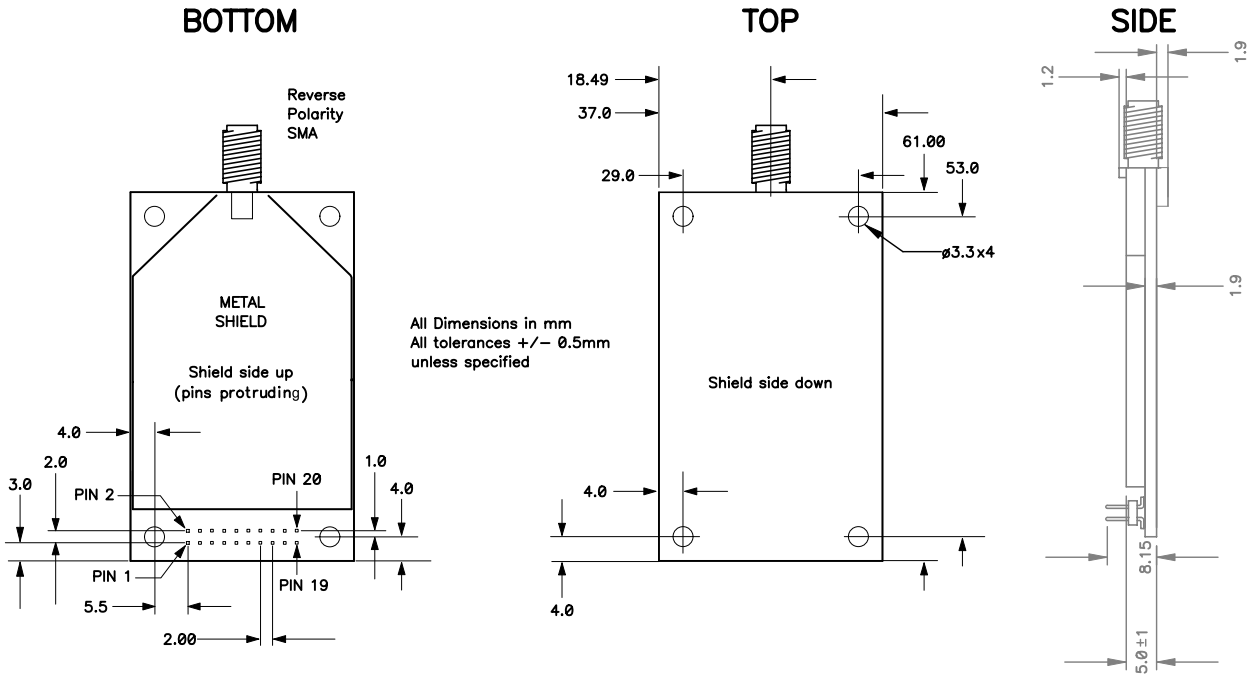


**9XTend OEM RF Module** (with MMCX Connector)

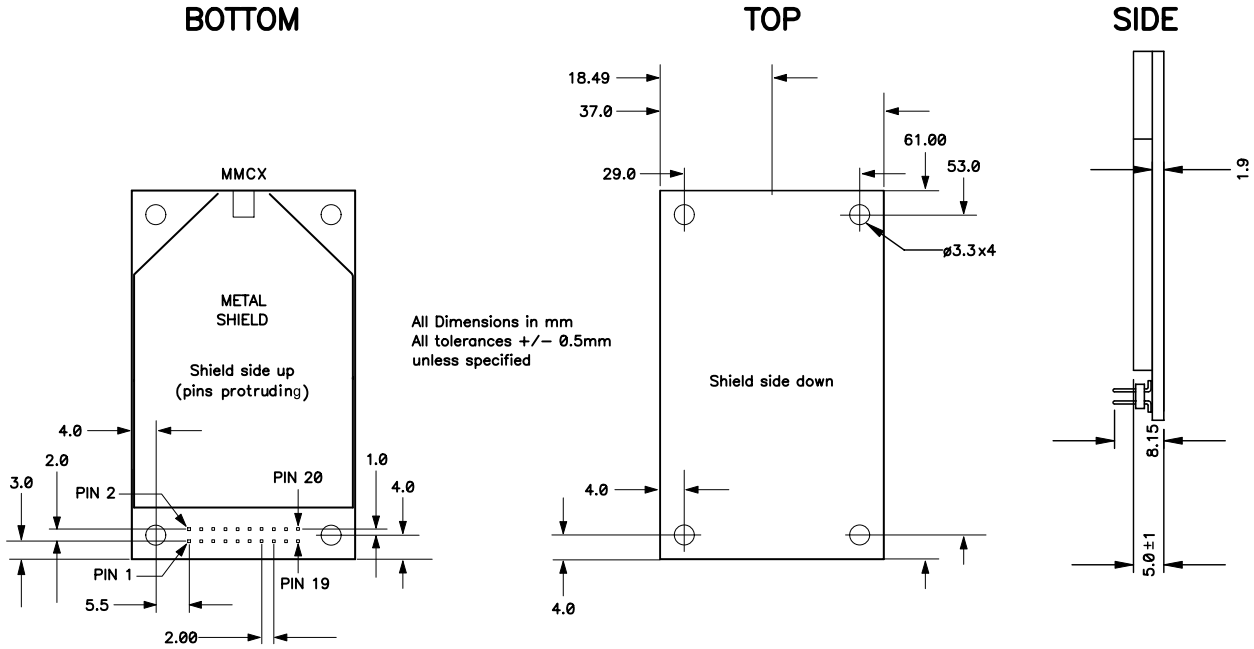


# Contact MaxStream

| | | |
|---|---|---|
| **Technical Support** | Phone. | (866) 765-9885 Toll-free in U.S. & Canada<br>(801) 765-9885 Worldwide |
| | Live Chat. | www.maxstream.net |
| | E-Mail. | rf-xperts@maxstream.net |

MaxStream office hours are 8am - 5pm U.S. Mountain Standard Time

© 2005 MaxStream, Inc.