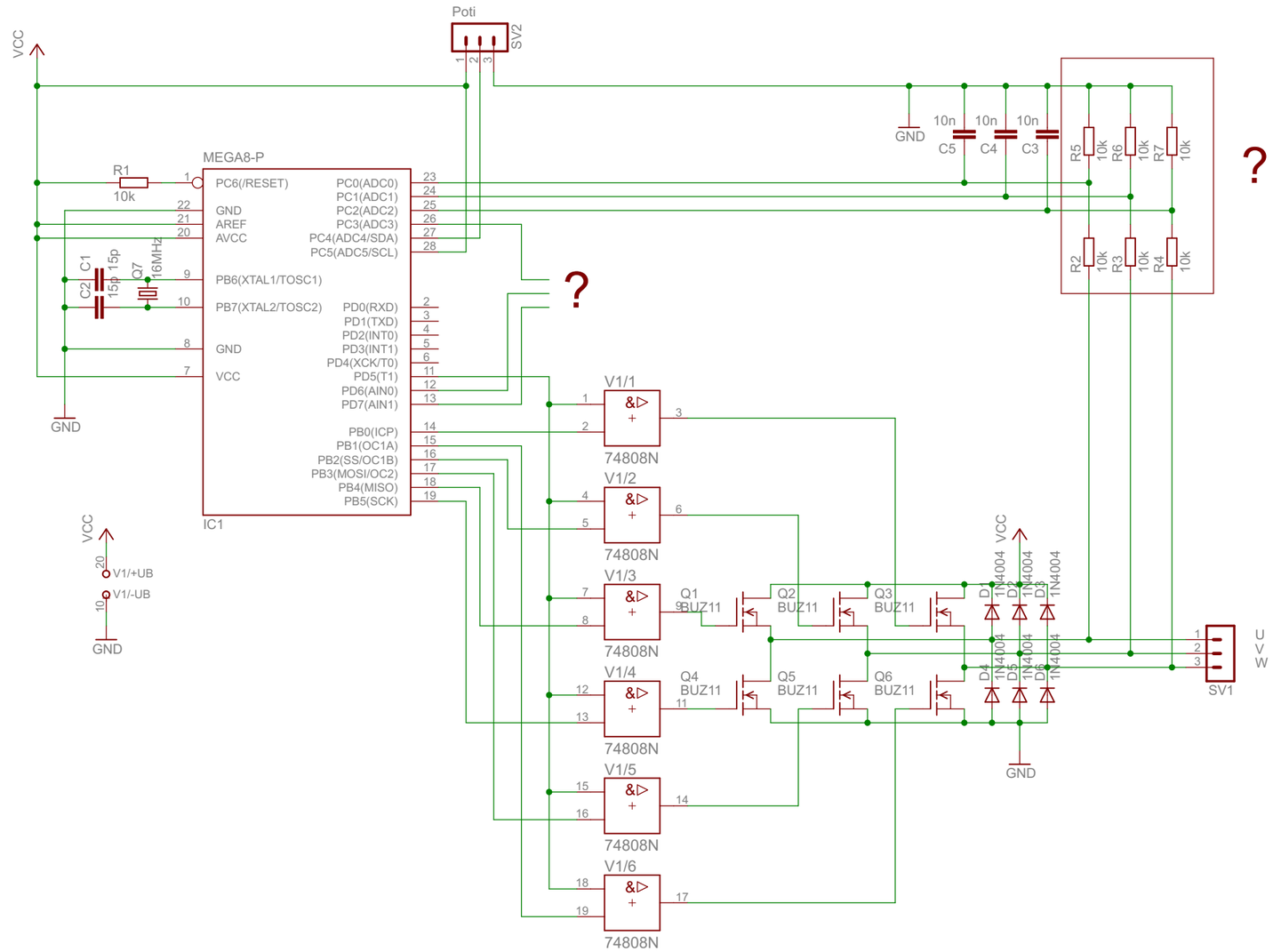
VCC
Poti
SV2
MEGA8-P
R1
10k
PC6(/RESET)
GND
AREF
AVCC
PB6(XTAL1/TOSC1)
PB7(XTAL2/TOSC2)
GND
VCC
PC0(ADC0)
PC1(ADC1)
PC2(ADC2)
PC3(ADC3)
PC4(ADC4/SDA)
PC5(ADC5/SCL)
PD0(RXD)
PD1(TXD)
PD2(INT0)
PD3(INT1)
PD4(XCK/T0)
PD5(T1)
PD6(AIN0)
PD7(AIN1)
PB0(ICP)
PB1(OC1A)
PB2(SS/OC1B)
PB3(MOSI/OC2)
PB4(MISO)
PB5(SCK)
IC1
C1 15p
C2 15p
Q7 16MHz
GND
10n C5
10n C4
10n C3
R5 10k
R6 10k
R7 10k
R2 10k
R3 10k
R4 10k
?
?
V1/1
V1/2
V1/3
V1/4
V1/5
V1/6
74808N
V1/+UB
V1/-UB
Q1 BUZ11
Q2 BUZ11
Q3 BUZ11
Q4 BUZ11
Q5 BUZ11
Q6 BUZ11
D1 1N4004
D2 1N4004
D3 1N4004
D4 1N4004
D5 1N4004
D6 1N4004
SV1
U
V
W