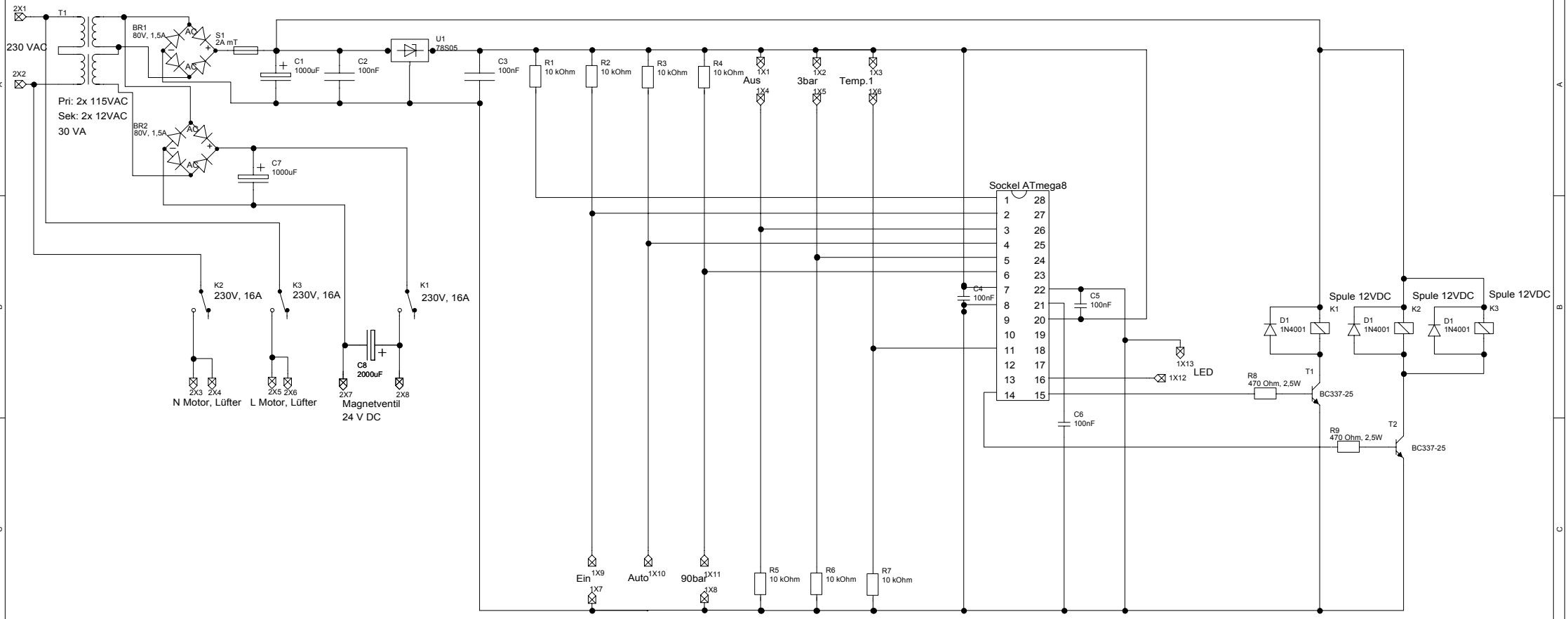

Title Schaltplan HEM 4PA		
Author Peter Mirtschink Matjeschk-PowerTools		
File ıstellungen\PM\Desktop\Schaltplan HEM 4PA.dsn		Document A
Revision 1.0	Date 04.01.2011	Sheets 1 of 1