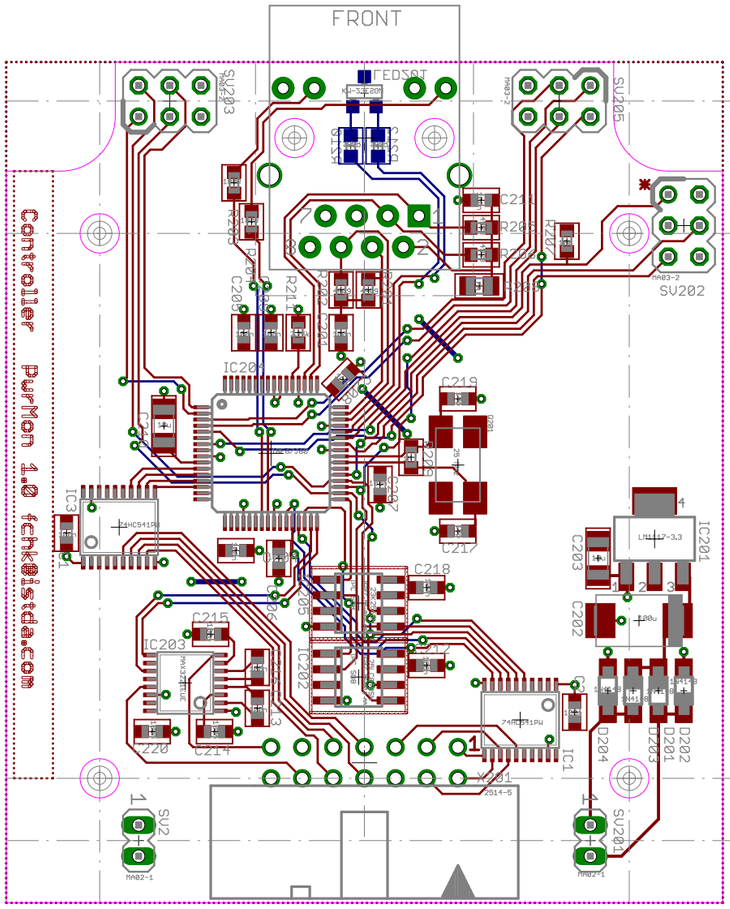
FRONT
Controller PwrMon 1.0 fchk@istda.com

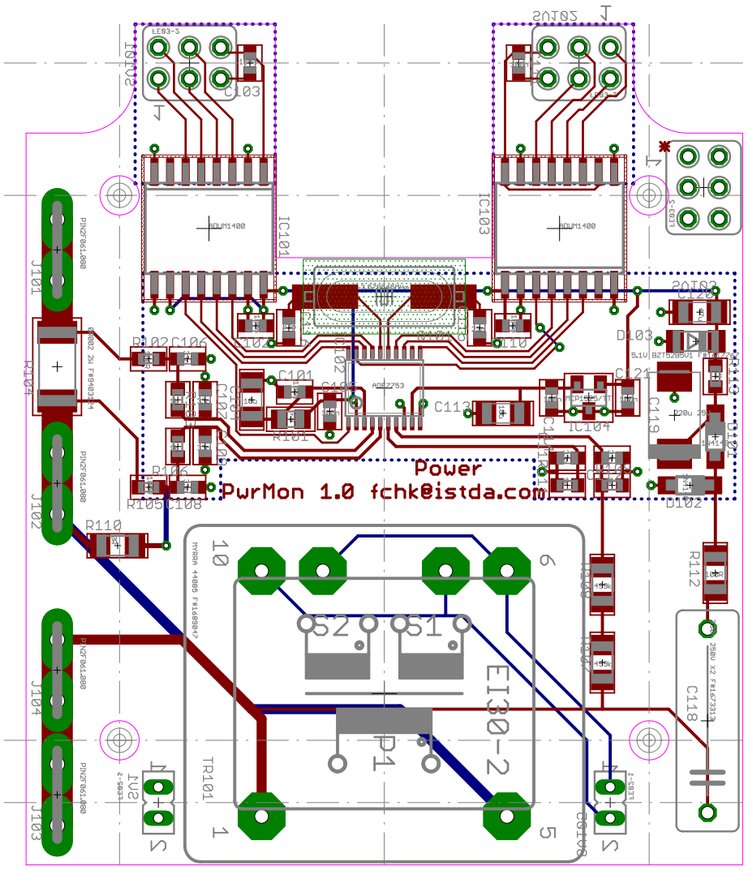
Power
PwrMon 1.0 fchk@istda.com
EI30-2

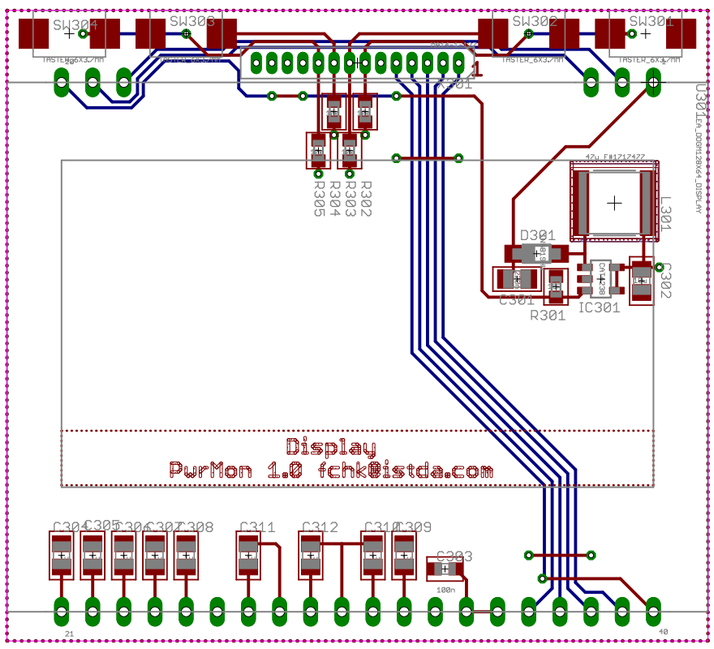
Display
PwrMon 1.0 fchk@istda.com