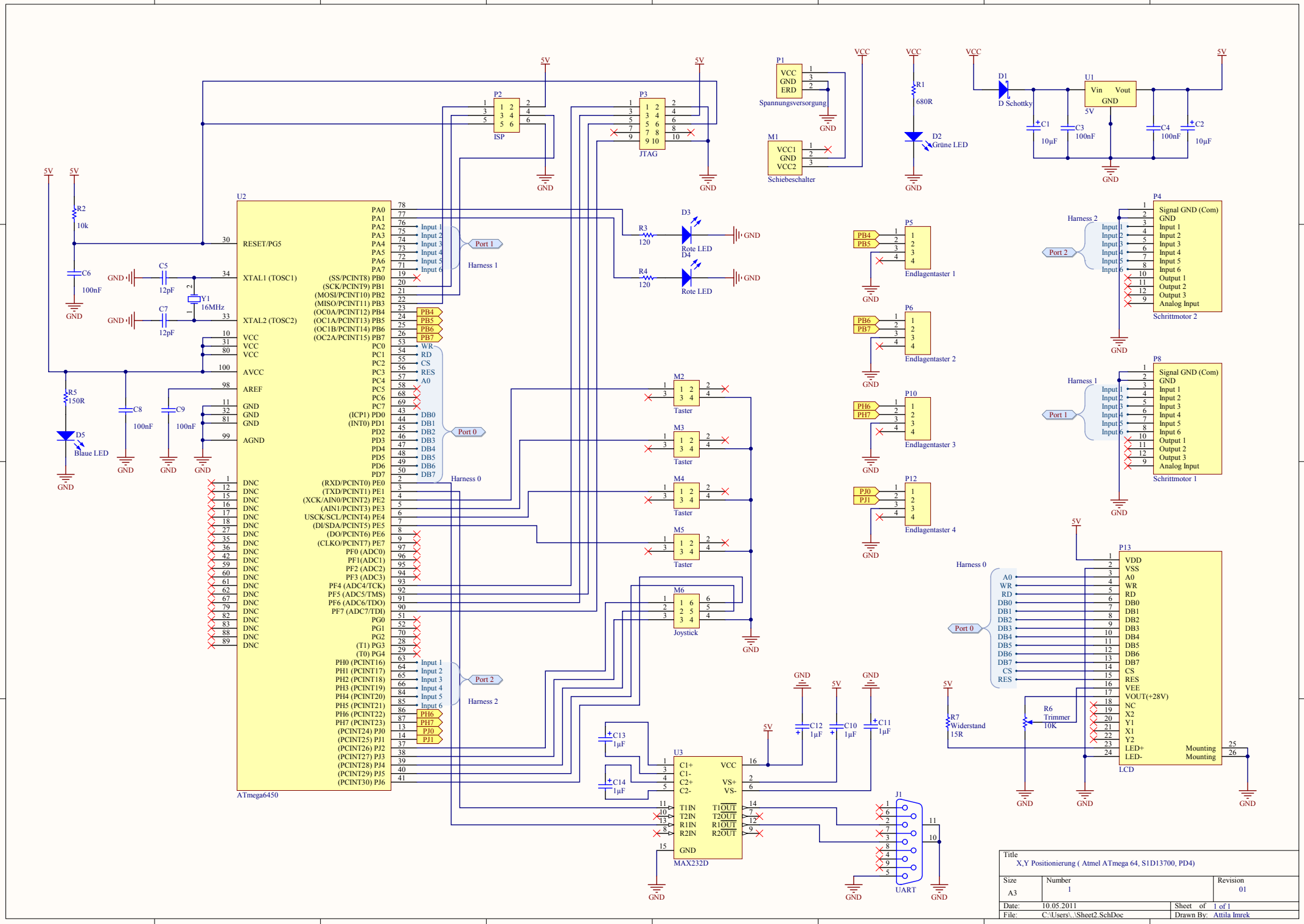

Title	X,Y Positionierung (Atmel ATmega 64, S1D13700, PD4)	
Size A3	Number 1	Revision 01
Date: 10.05.2011	Sheet of 1 of 1	
File: C:\Users\..\Sheet2.SchDoc	Drawn By: Attila Imrek	