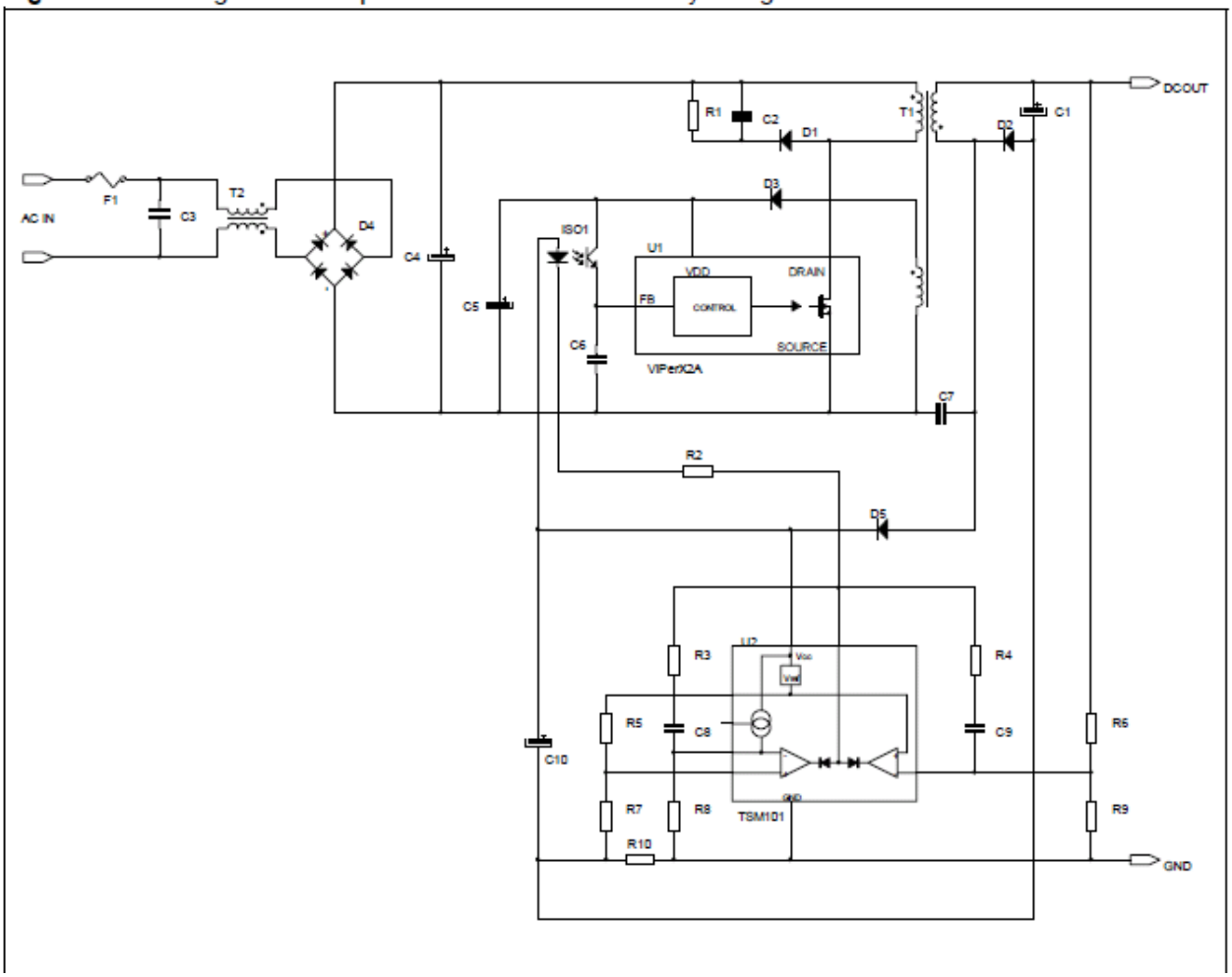Figure 8 : Rectangular U-I output characteristics for battery charger