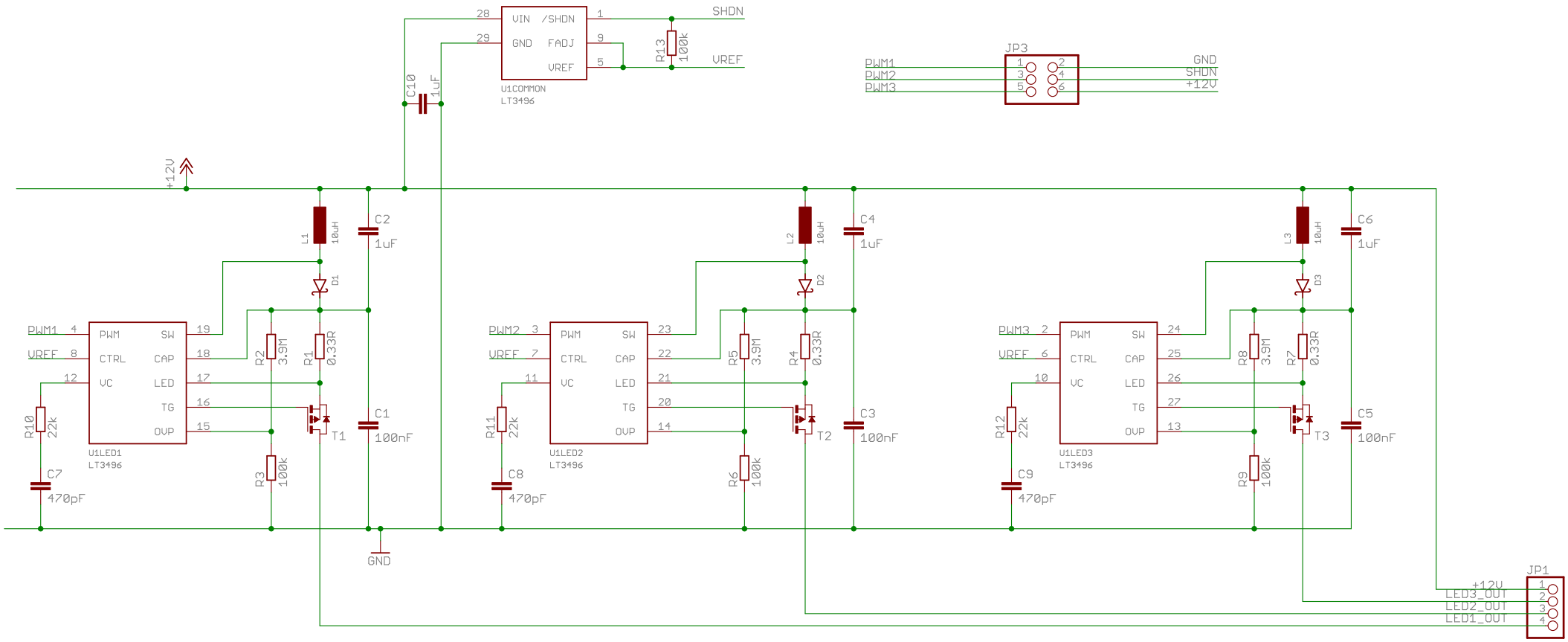
VIN
/SHDN
GND
FADJ
VREF
U1COMMON
LT3496
SHDN
VREF
R13
100k
C10
1uF
JP3
PWM1
PWM2
PWM3
GND
SHDN
+12V
+12V
L1
10uH
D1
C2
1uF
L2
10uH
D2
C4
1uF
L3
10uH
D3
C6
1uF
PWM1
VREF
PWM
CTRL
VC
SW
CAP
LED
TG
OVP
U1LED1
LT3496
R10
22k
C7
470pF
R2
3.9M
R1
0.33R
R3
100k
T1
C1
100nF
GND
PWM2
VREF
U1LED2
LT3496
R11
22k
C8
470pF
R5
3.9M
R4
0.33R
R6
100k
T2
C3
100nF
PWM3
VREF
U1LED3
LT3496
R12
22k
C9
470pF
R8
3.9M
R7
0.33R
R9
100k
T3
C5
100nF
JP1
+12V
LED3_OUT
LED2_OUT
LED1_OUT