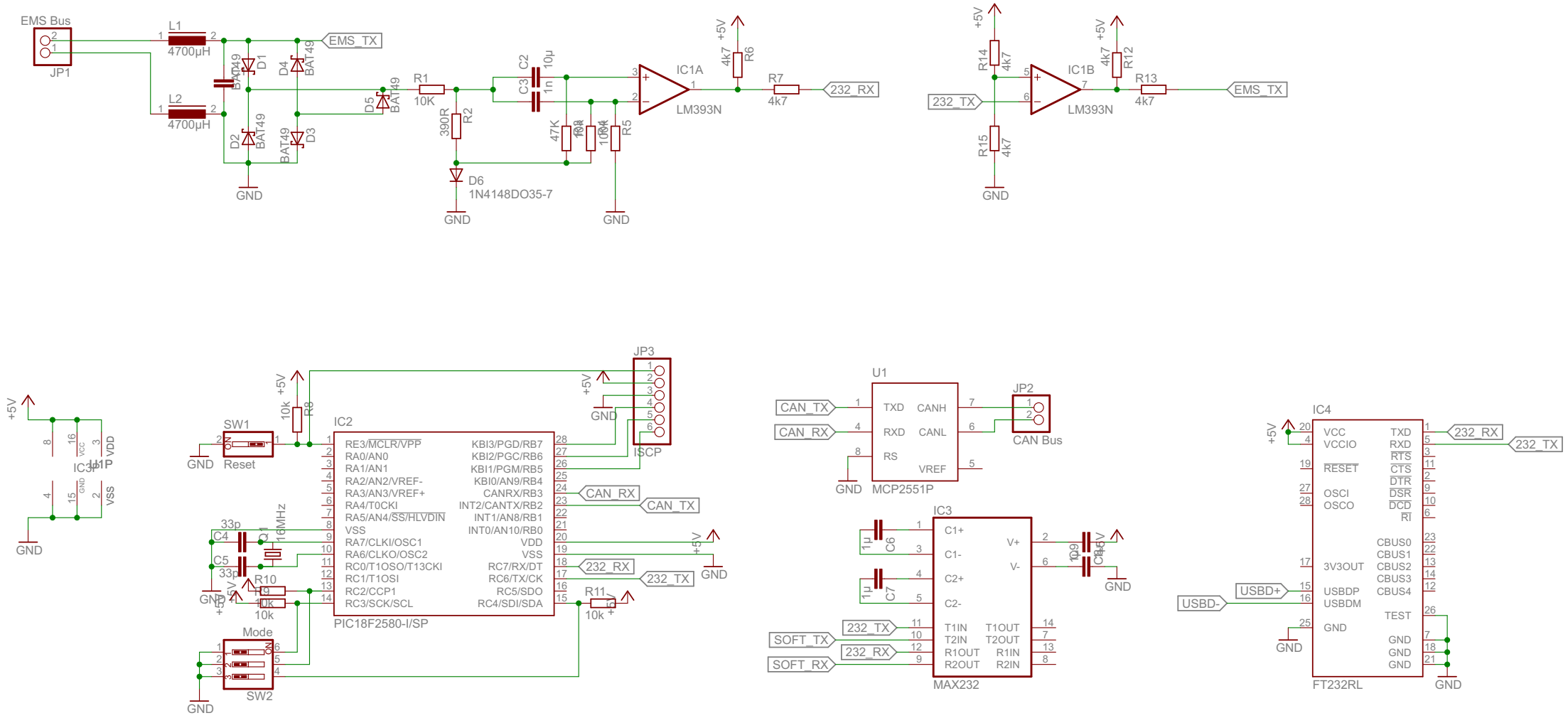

08.09.2011 20:40:05 f=0.90 C:\Eigene Daten\Projekte\Eagle\EMS_PIC\EMS_PIC.sch (Sheet: 1/1)