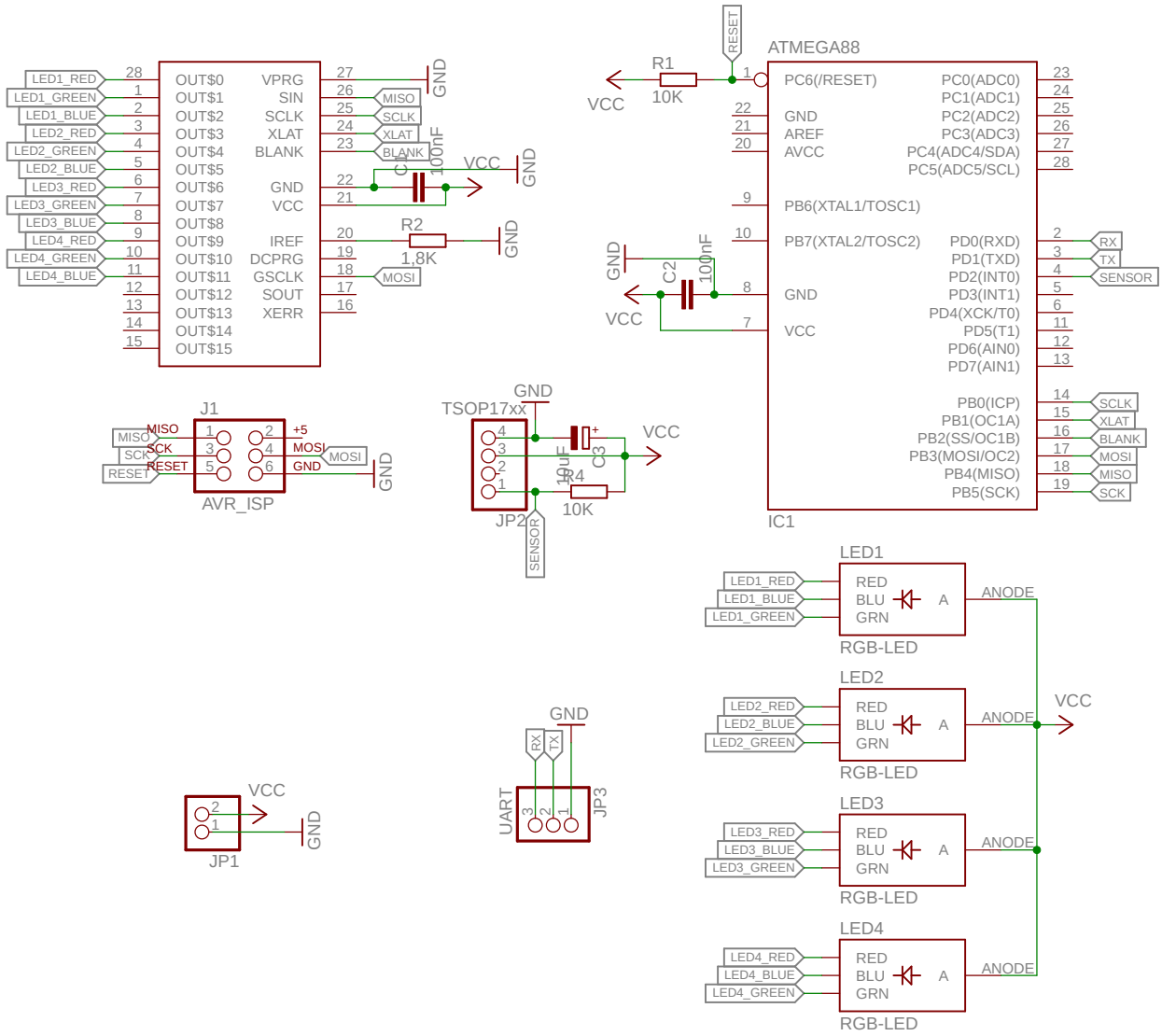
ATMEGA88
IC1
PC6(/RESET)
GND
AREF
AVCC
PB6(XTAL1/TOSC1)
PB7(XTAL2/TOSC2)
GND
VCC
PC0(ADC0)
PC1(ADC1)
PC2(ADC2)
PC3(ADC3)
PC4(ADC4/SDA)
PC5(ADC5/SCL)
PD0(RXD)
PD1(TXD)
PD2(INT0)
PD3(INT1)
PD4(XCK/T0)
PD5(T1)
PD6(AIN0)
PD7(AIN1)
PB0(ICP)
PB1(OC1A)
PB2(SS/OC1B)
PB3(MOSI/OC2)
PB4(MISO)
PB5(SCK)
RESET
R1
10K
C2
100nF
RX
TX
SENSOR
SCLK
XLAT
BLANK
MOSI
MISO
OUT$0
OUT$1
OUT$2
OUT$3
OUT$4
OUT$5
OUT$6
OUT$7
OUT$8
OUT$9
OUT$10
OUT$11
OUT$12
OUT$13
OUT$14
OUT$15
VPRG
SIN
SCLK
XLAT
BLANK
GND
VCC
IREF
DCPRG
GSCLK
SOUT
XERR
C1
100nF
R2
1,8K
LED1_RED
LED1_GREEN
LED1_BLUE
LED2_RED
LED2_GREEN
LED2_BLUE
LED3_RED
LED3_GREEN
LED3_BLUE
LED4_RED
LED4_GREEN
LED4_BLUE
J1
AVR_ISP
MISO
SCK
RESET
+5
MOSI
GND
TSOP17xx
JP2
C3
10uF
R4
10K
UART
JP3
JP1
LED1
LED2
LED3
LED4
RGB-LED
RED
BLU
GRN
A
ANODE