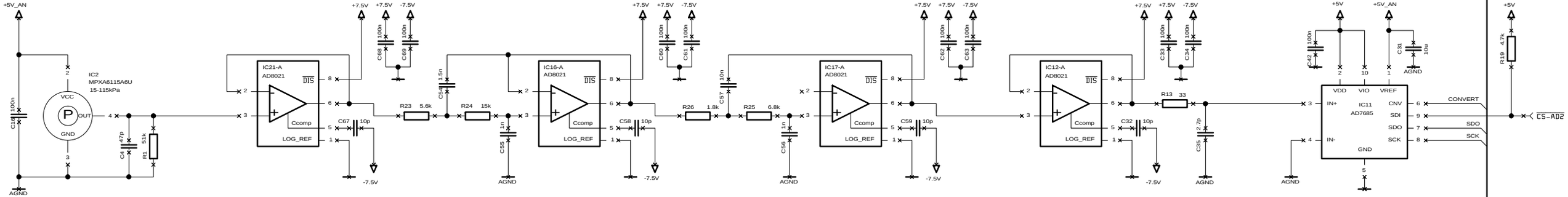
+5V_AN
AGND
C19 100n
IC2
MPXA6115A6U
15-115kPa
VCC
OUT
GND
C4 47p
R1 51k
IC21-A
AD8021
DIS
Ccomp
LOG_REF
+7.5V
-7.5V
C68 100n
C69 100n
C67 10p
R23 5.6k
C54 1.5n
R24 15k
C55 1n
IC16-A
C60 100n
C61 100n
C58 10p
R26 1.8k
C57 10n
R25 6.8k
C56 1n
IC17-A
C62 100n
C63 100n
C59 10p
IC12-A
C33 100n
C34 100n
C32 10p
R13 33
C35 2.7p
C42 100n
C31 10u
IC11
AD7685
VDD
VIO
VREF
IN+
IN-
CNV
SDI
SDO
SCK
CONVERT
SDO
SCK
R19 4.7k
CS-AD2