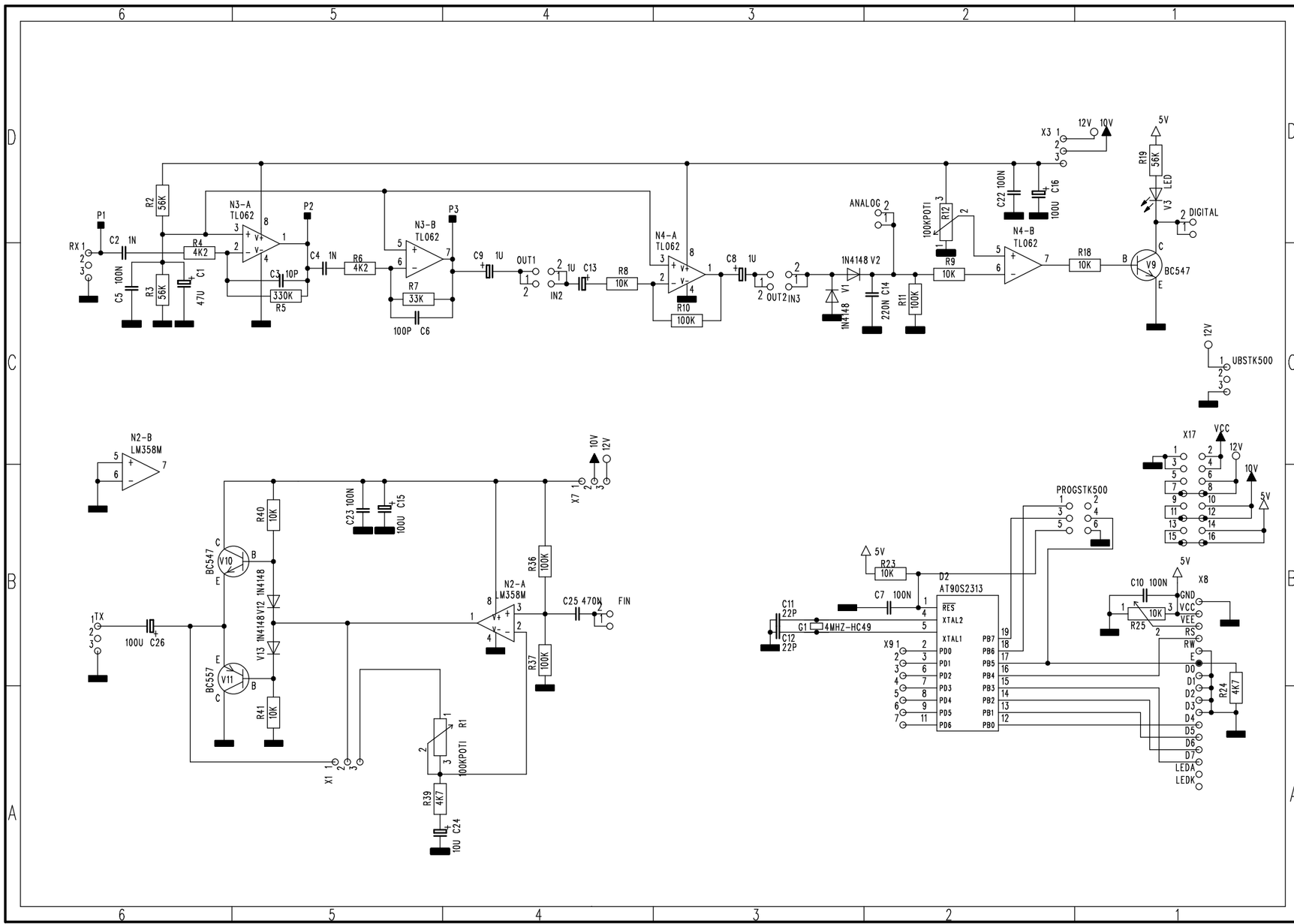
N3-A TL062
N3-B TL062
N4-A TL062
N4-B TL062
N2-B LM358M
N2-A LM358M
BC547
BC557
AT90S2313
4MHZ-HC49
100KPOTI
PROGSTK500
UBSTK500
DIGITAL
ANALOG
OUT1
OUT2
IN2
IN3
FIN
RX
TX
LED
LEDA
LEDK
VCC
GND
RS
RW
E
D0
D1
D2
D3
D4
D5
D6
D7