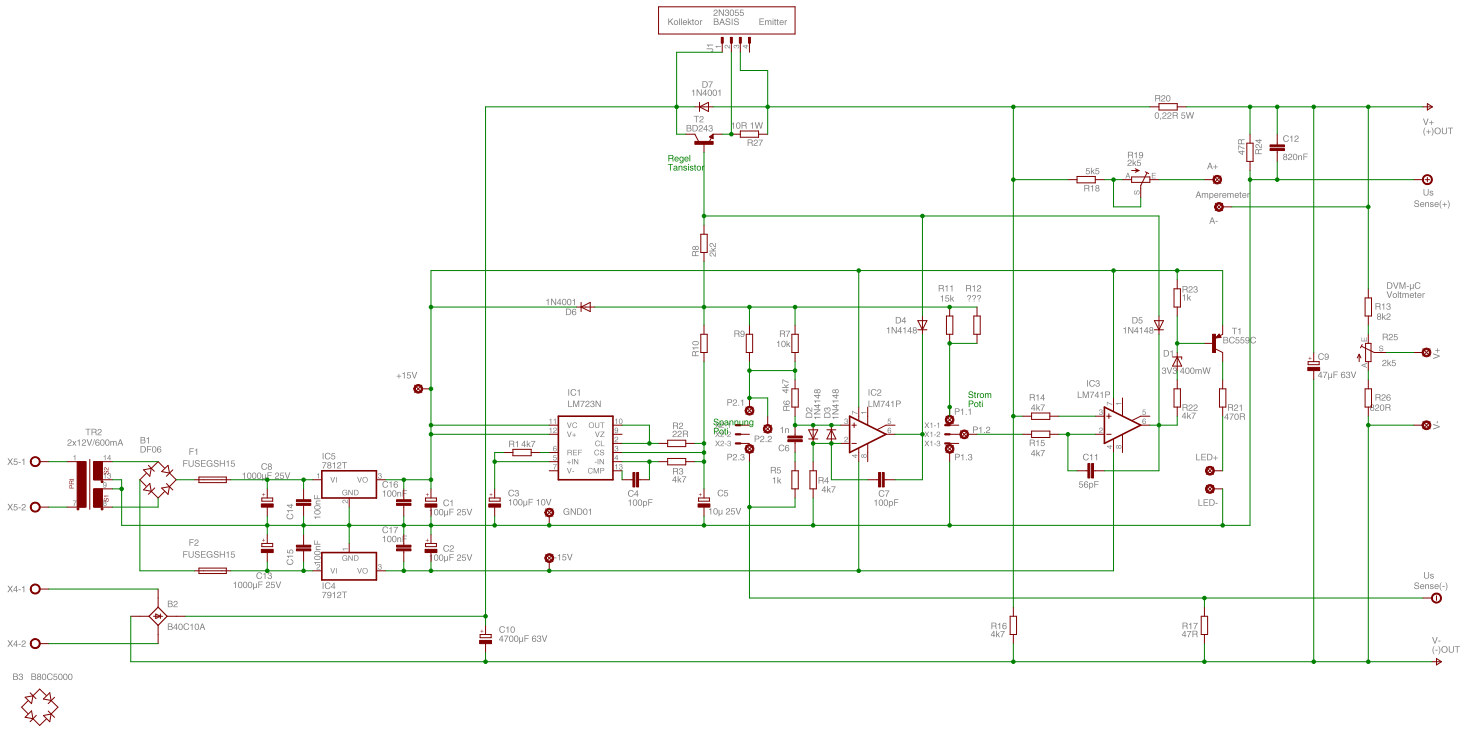

Kollektor
2N3055
BASIS
Emitter
D7
1N4001
T2
BD243
10R 1W
R27
Regel
Tansistor
R20
0,22R 5W
V+
(+)OUT
R24
47R
C12
820nF
R19
2k5
5k5
R18
A+
Amperemeter
A-
Us
Sense(+)
R8
2k2
1N4001
D6
R11
15k
R12
???
D4
1N4148
D5
1N4148
R23
1k
T1
BC559C
DVM-µC
Voltmeter
R13
8k2
R25
2k5
V+
V-
R26
820R
C9
47µF 63V
R10
R9
R7
10k
D1
3V3 400mW
R22
4k7
R21
470R
+15V
IC1
LM723N
VC
OUT
V+
VZ
CL
REF
CS
+IN
-IN
V-
CMP
R2
22R
R3
4k7
R14k7
C4
100pF
C5
10µ 25V
P2.1
P2.2
P2.3
Spannung
Poti
R6
4k7
1n
C6
D2
1N4148
D3
1N4148
IC2
LM741P
Strom
Poti
P1.1
P1.2
P1.3
X1-1
X1-2
X1-3
R5
1k
R4
4k7
C7
100pF
R14
4k7
R15
4k7
IC3
LM741P
C11
56pF
LED+
LED-
TR2
2x12V/600mA
B1
DF06
F1
FUSEGSH15
C8
1000µF 25V
IC5
7812T
VI
VO
GND
C16
100nF
C1
100µF 25V
C3
100µF 10V
GND01
X5-1
X5-2
C14
100nF
C17
100nF
C2
100µF 25V
F2
FUSEGSH15
C13
1000µF 25V
C15
100nF
IC4
7912T
-15V
X4-1
X4-2
B2
B40C10A
C10
4700µF 63V
R16
4k7
R17
47R
Us
Sense(-)
V-
(-)OUT
B3 B80C5000