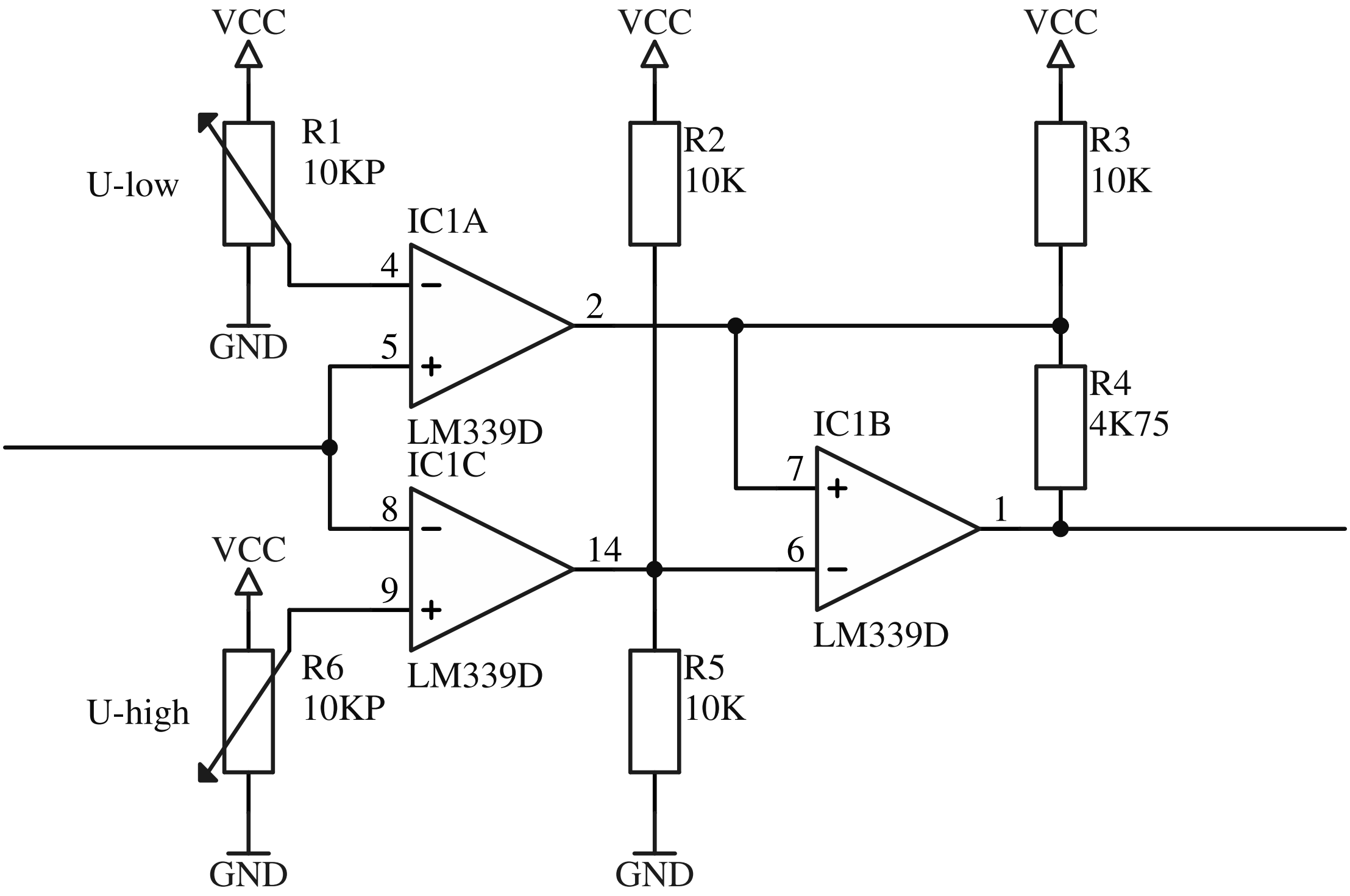
VCC
VCC
VCC
R1
10KP
U-low
R2
10K
R3
10K
IC1A
4
2
5
GND
R4
4K75
LM339D
IC1B
IC1C
7
8
1
14
6
VCC
9
LM339D
R6
10KP
LM339D
R5
10K
U-high
GND
GND