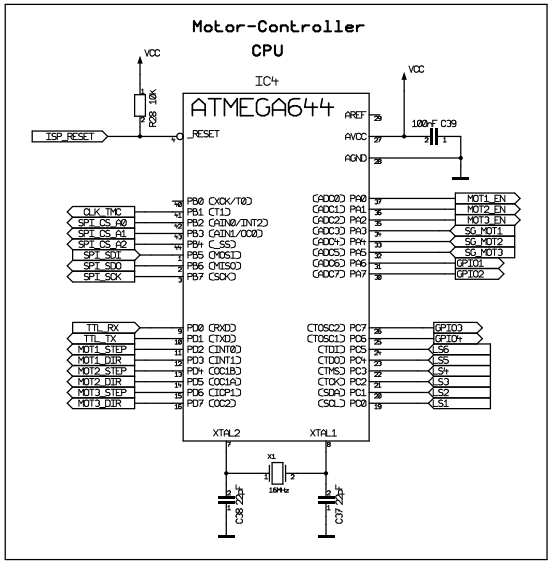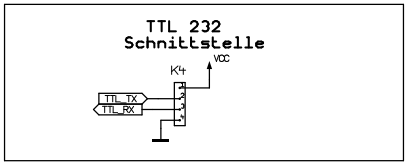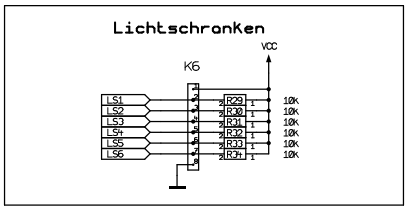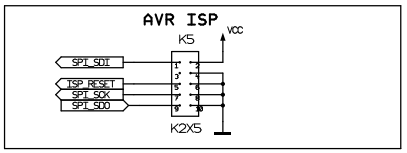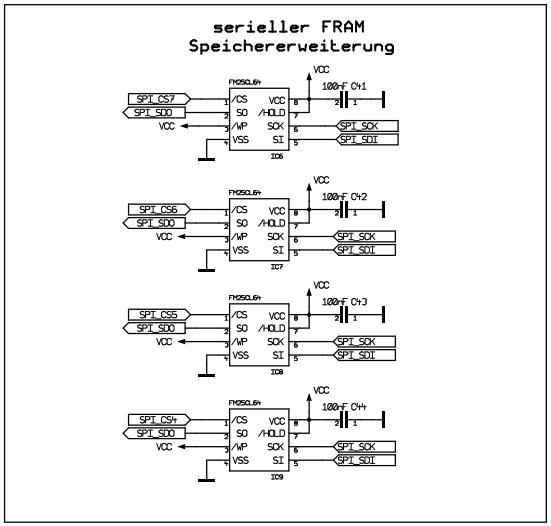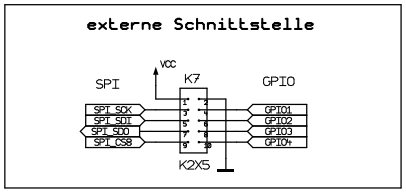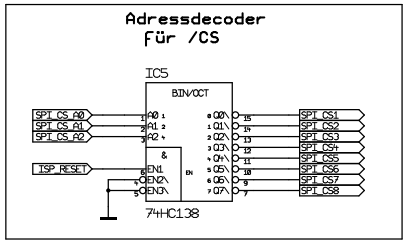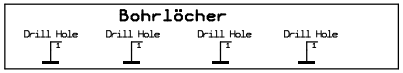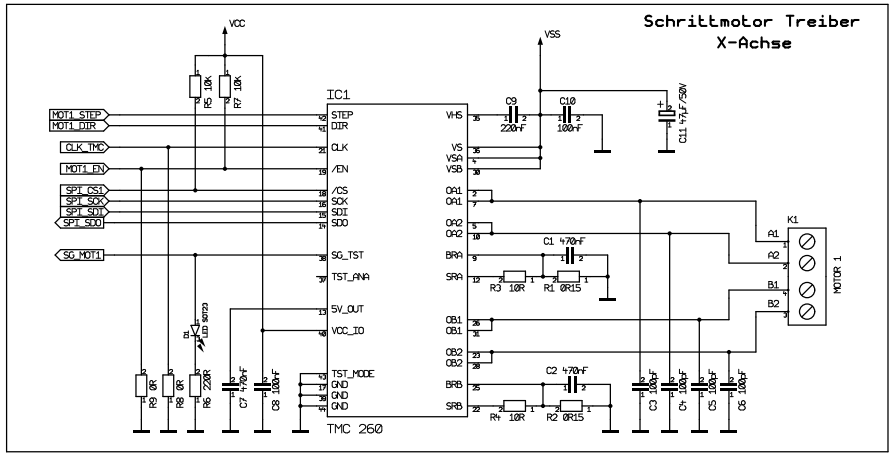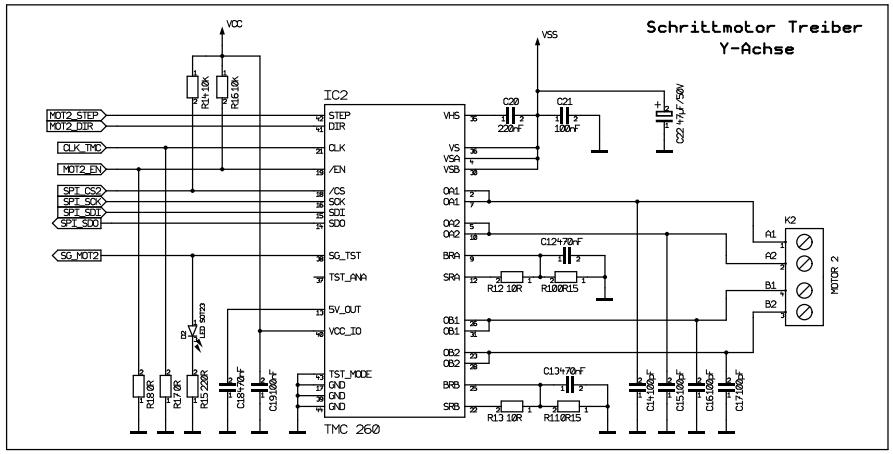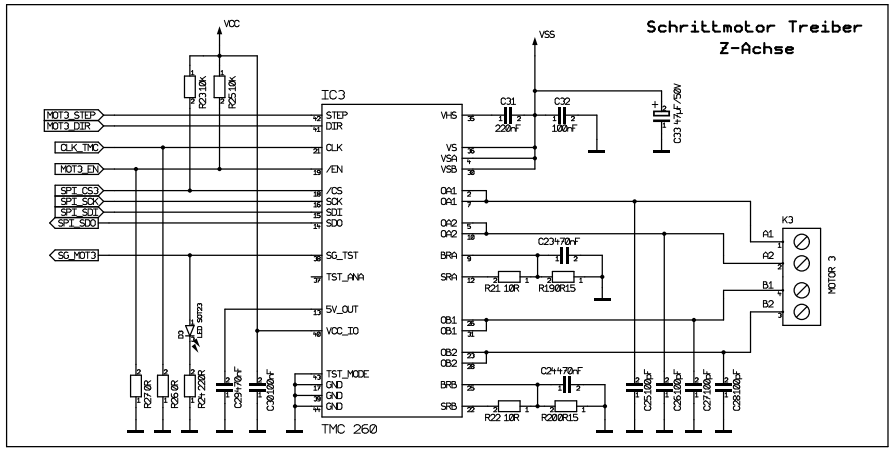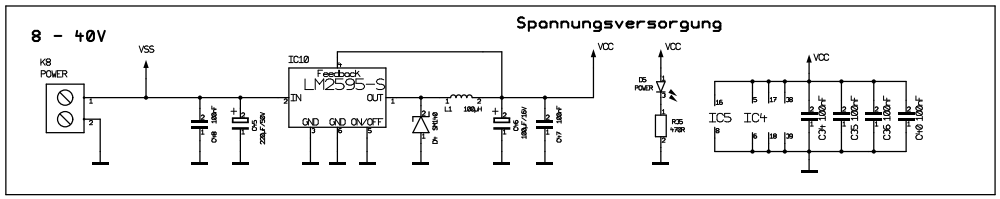TRINAMIC TMC260 STEPPER MOTOR DRIVER EVAL BOARD