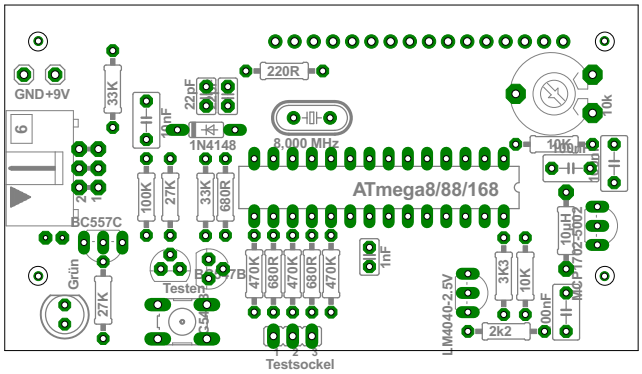

28.04.2012 01:00:56 D:\AVR\Transistortester\Component-Tester V 5_2_1\Component-Tester_v5_2_1.brd