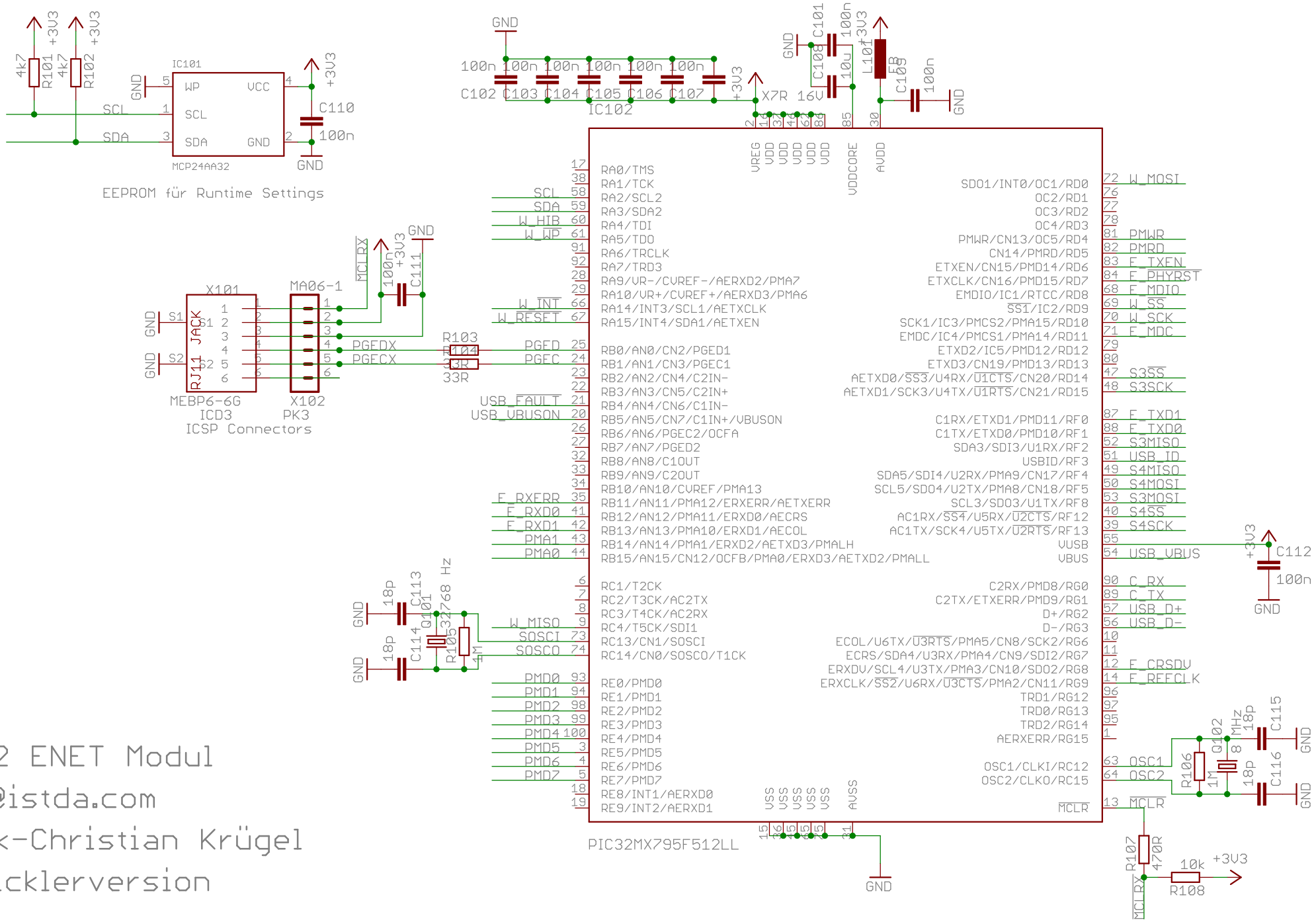

PIC32 ENET Modul

fchk@istda.com

Frank-Christian Krügel

Entwicklerversion

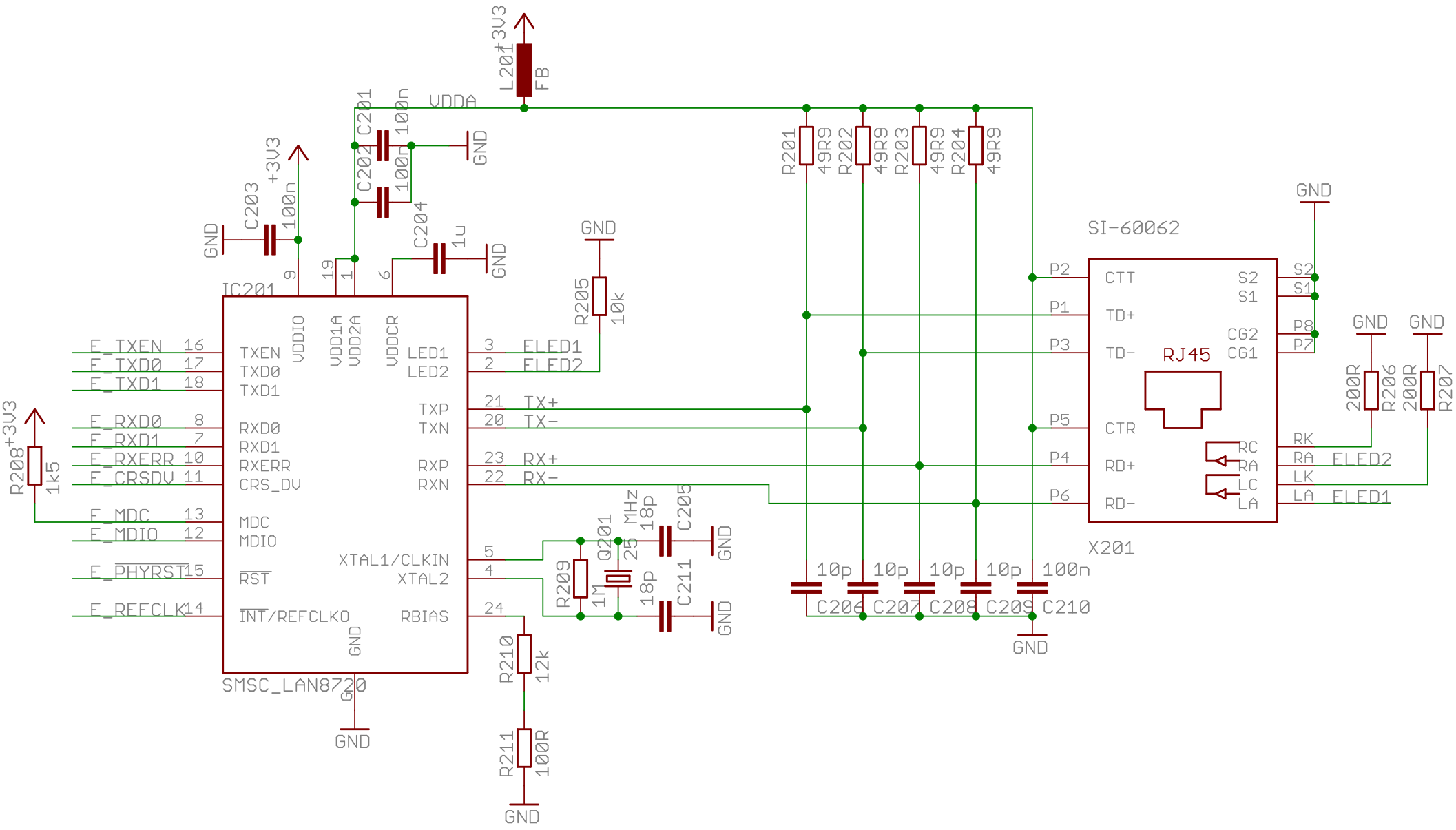
L201
+3V3
FB
VDDA
C201
100n
C202
100n
GND
C203
100n
+3V3
GND
C204
1u
GND
IC201
SMSC_LAN8720
VDDIO
VDD1A
VDD2A
VDDCR
TXEN
TXD0
TXD1
RXD0
RXD1
RXERR
CRS_DV
MDC
MDIO
RST
INT/REFCLKO
LED1
LED2
TXP
TXN
RXP
RXN
XTAL1/CLKIN
XTAL2
RBIAS
GND
E_TXEN 16
E_TXD0 17
E_TXD1 18
E_RXD0 8
E_RXD1 7
E_RXERR 10
E_CRSDV 11
E_MDC 13
E_MDIO 12
E_PHYRST 15
E_REFCLK 14
3 FLED1
2 FLED2
21 TX+
20 TX−
23 RX+
22 RX−
5
4
24
R205
10k
R208
1k5
+3V3
Q201
25 MHz
18p
C205
18p
C211
R209
1M
R210
12k
R211
100R
GND
R201
49R9
R202
49R9
R203
49R9
R204
49R9
10p
C206
10p
C207
10p
C208
10p
C209
100n
C210
GND
SI-60062
CTT
TD+
TD−
CTR
RD+
RD−
S2
S1
CG2
CG1
RJ45
RC
RA
LC
LA
P2
P1
P3
P5
P4
P6
S2
S1
P8
P7
RK
RA FLED2
LK
LA FLED1
X201
GND
200R
R206
200R
R207

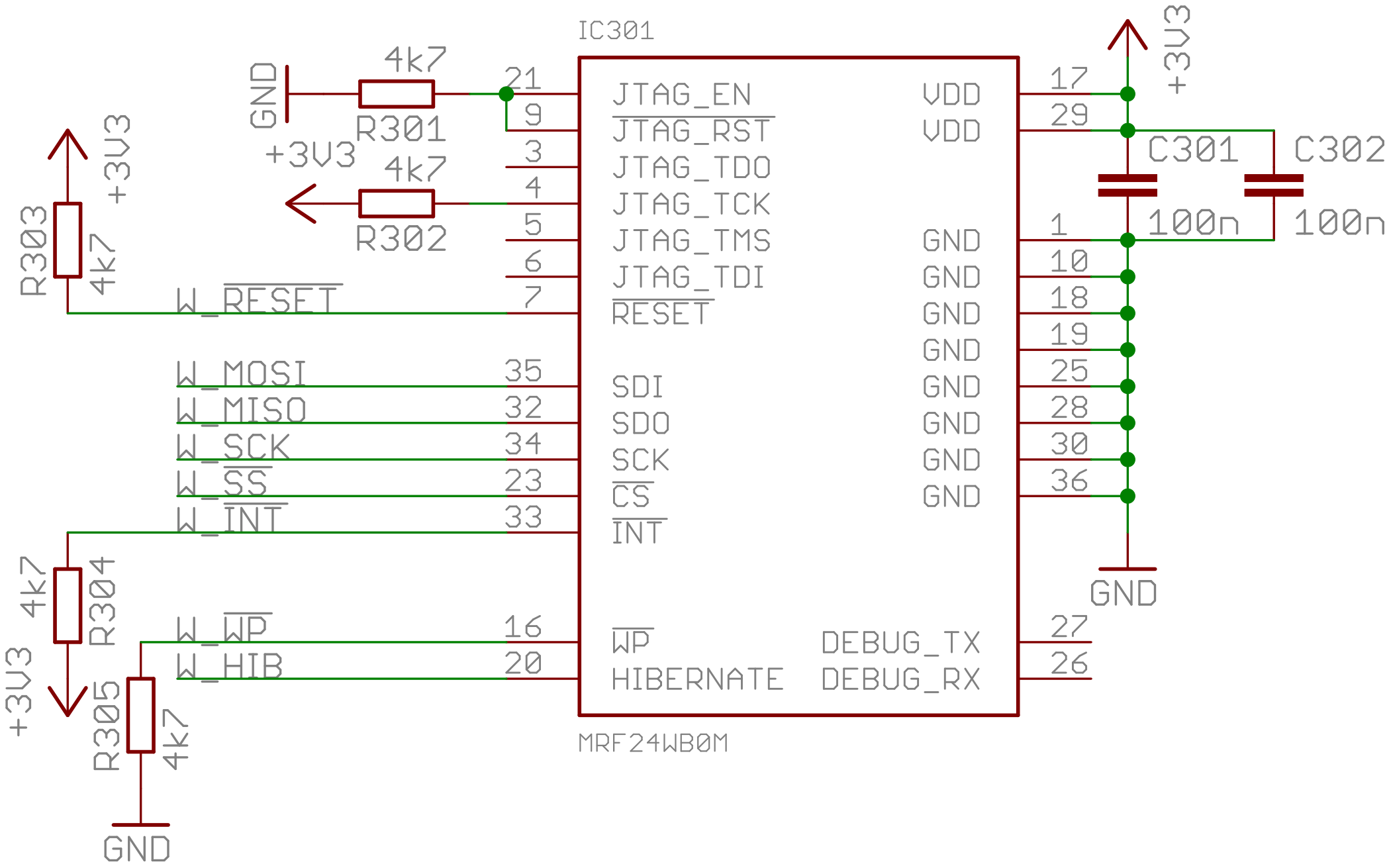
IC301
MRF24WB0M
JTAG_EN
JTAG_RST
JTAG_TDO
JTAG_TCK
JTAG_TMS
JTAG_TDI
RESET
SDI
SDO
SCK
CS
INT
WP
HIBERNATE
VDD
VDD
GND
DEBUG_TX
DEBUG_RX
21
9
3
4
5
6
7
35
32
34
23
33
16
20
17
29
1
10
18
19
25
28
30
36
27
26
W_RESET
W_MOSI
W_MISO
W_SCK
W_SS
W_INT
W_WP
W_HIB
R301
4k7
R302
4k7
R303
4k7
R304
4k7
R305
4k7
C301
100n
C302
100n
+3V3
GND

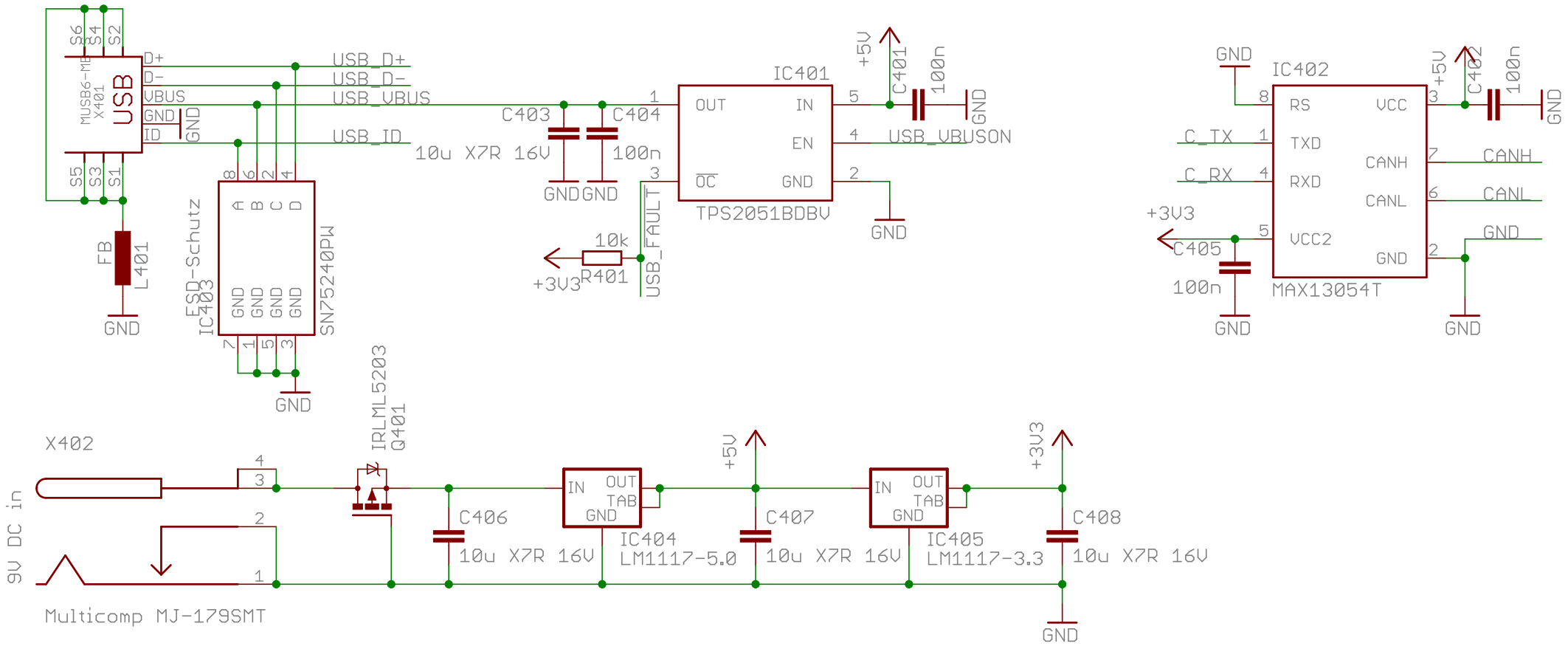
MUSB6-MB
X401
USB
S6
S4
S2
S5
S3
S1
D+
D-
VBUS
GND
ID
USB_D+
USB_D-
USB_VBUS
USB_ID
FB
L401
GND
ESD-Schutz
IC403
SN75240PW
A
B
C
D
GND
C403
10u X7R 16V
C404
100n
IC401
TPS2051BDBV
OUT
IN
EN
OC
GND
USB_FAULT
10k
R401
+3V3
+5V
C401
100n
USB_VBUSON
IC402
MAX13054T
RS
TXD
RXD
VCC2
VCC
CANH
CANL
C_TX
C_RX
C405
C402
X402
9V DC in
Multicomp MJ-179SMT
IRLML5203
Q401
C406
10u X7R 16V
IC404
LM1117-5.0
IN
OUT
TAB
C407
IC405
LM1117-3.3
C408