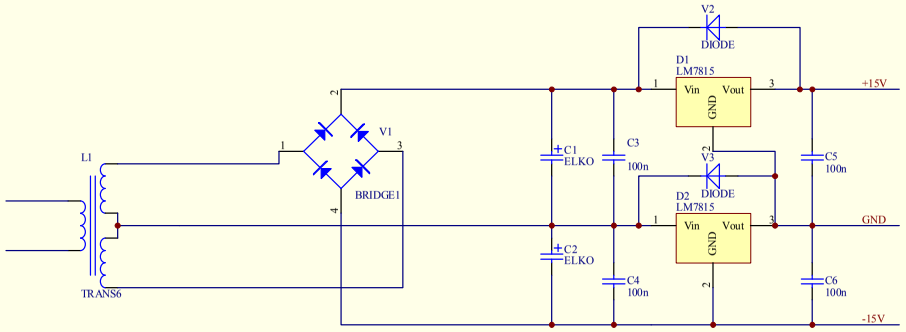

Title			
Size B	Number		Revision
Date: 13-Jul-2006		Sheet of	
File: D:\Hardware\Trennverstaerker\Trennverstaerker.Ddb		Drawn By:	