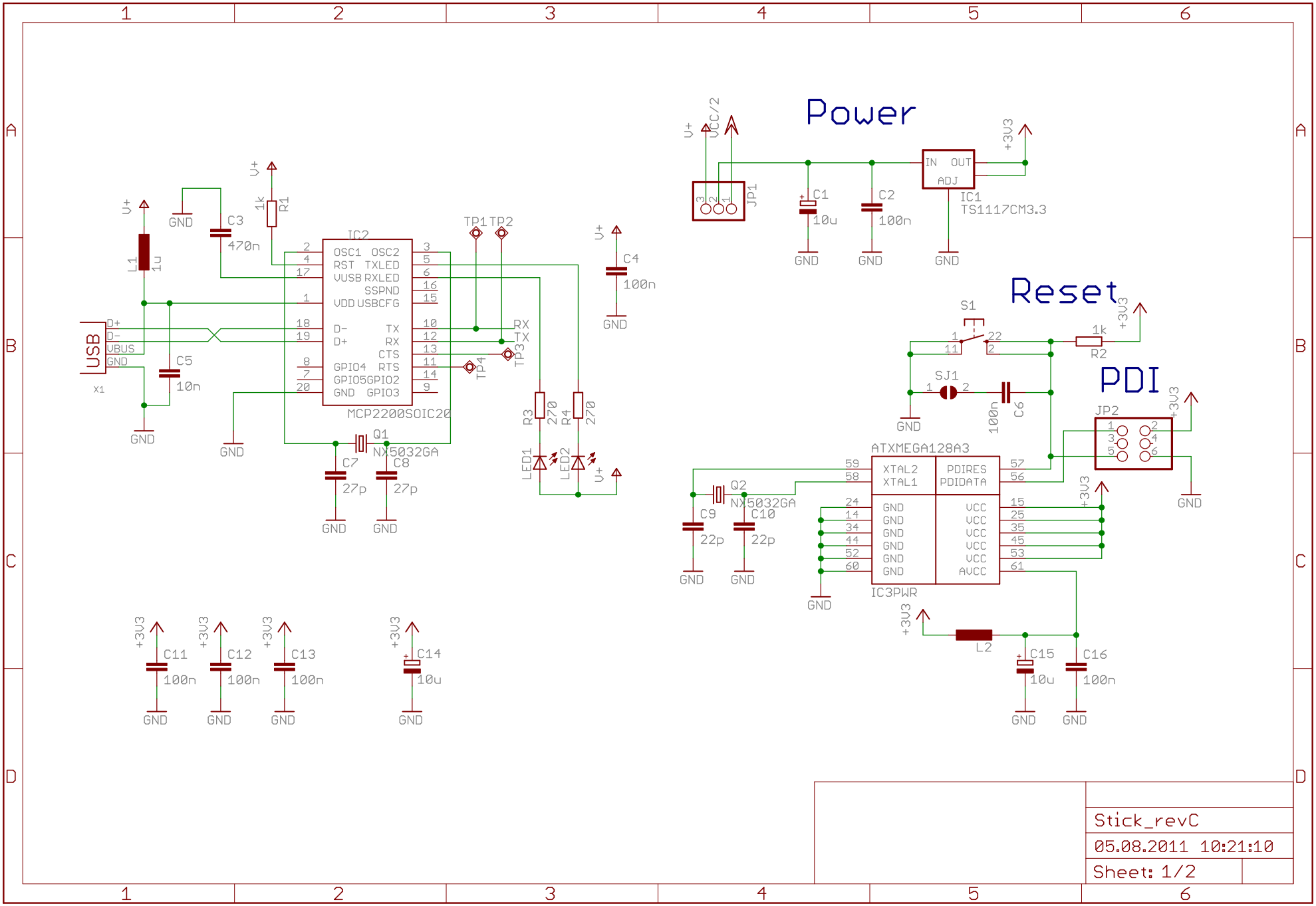
Power
Reset
PDI
USB
X1
D+
D-
VBUS
GND
L1
1u
C5
10n
C3
470n
R1
1k
IC2
OSC1 OSC2
RST TXLED
VUSB RXLED
SSPND
VDD USBCFG
D- TX
D+ RX
CTS
GPIO4 RTS
GPIO5 GPIO2
GND GPIO3
MCP2200SOIC20
TP1 TP2
TP3
TP4
RX
TX
Q1
NX5032GA
C7
27p
C8
27p
R3
270
R4
270
LED1
LED2
C4
100n
JP1
VCC/2
C1
10u
C2
100n
IC1
TS1117CM3.3
IN OUT
ADJ
+3V3
S1
R2
1k
SJ1
C6
100n
JP2
ATXMEGA128A3
XTAL2
XTAL1
PDIRES
PDIDATA
GND
VCC
AVCC
IC3PWR
Q2
NX5032GA
C9
22p
C10
22p
L2
C15
10u
C16
100n
C11
100n
C12
100n
C13
100n
C14
10u
Stick_revC
05.08.2011 10:21:10
Sheet: 1/2

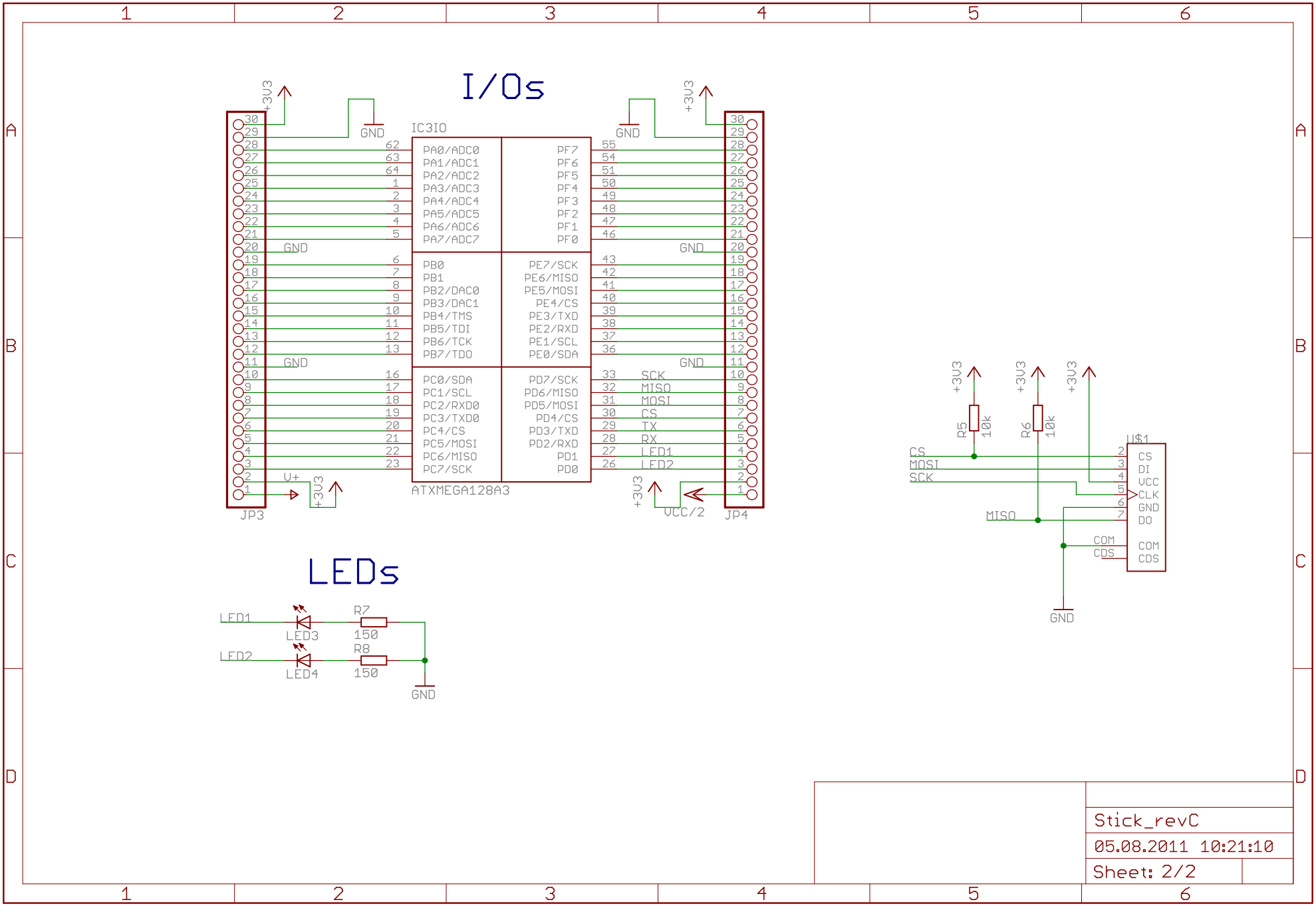
I/Os
IC3IO
ATXMEGA128A3
JP3
JP4
+3V3
GND
U+
VCC/2
PA0/ADC0
PA1/ADC1
PA2/ADC2
PA3/ADC3
PA4/ADC4
PA5/ADC5
PA6/ADC6
PA7/ADC7
PB0
PB1
PB2/DAC0
PB3/DAC1
PB4/TMS
PB5/TDI
PB6/TCK
PB7/TDO
PC0/SDA
PC1/SCL
PC2/RXD0
PC3/TXD0
PC4/CS
PC5/MOSI
PC6/MISO
PC7/SCK
PF7
PF6
PF5
PF4
PF3
PF2
PF1
PF0
PE7/SCK
PE6/MISO
PE5/MOSI
PE4/CS
PE3/TXD
PE2/RXD
PE1/SCL
PE0/SDA
PD7/SCK
PD6/MISO
PD5/MOSI
PD4/CS
PD3/TXD
PD2/RXD
PD1
PD0
SCK
MISO
MOSI
CS
TX
RX
LED1
LED2
LEDs
LED3
LED4
R7
R8
150
R5
R6
10k
U$1
CS
DI
VCC
CLK
GND
DO
COM
CDS
MOSI
SCK
MISO
Stick_revC
05.08.2011 10:21:10
Sheet: 2/2