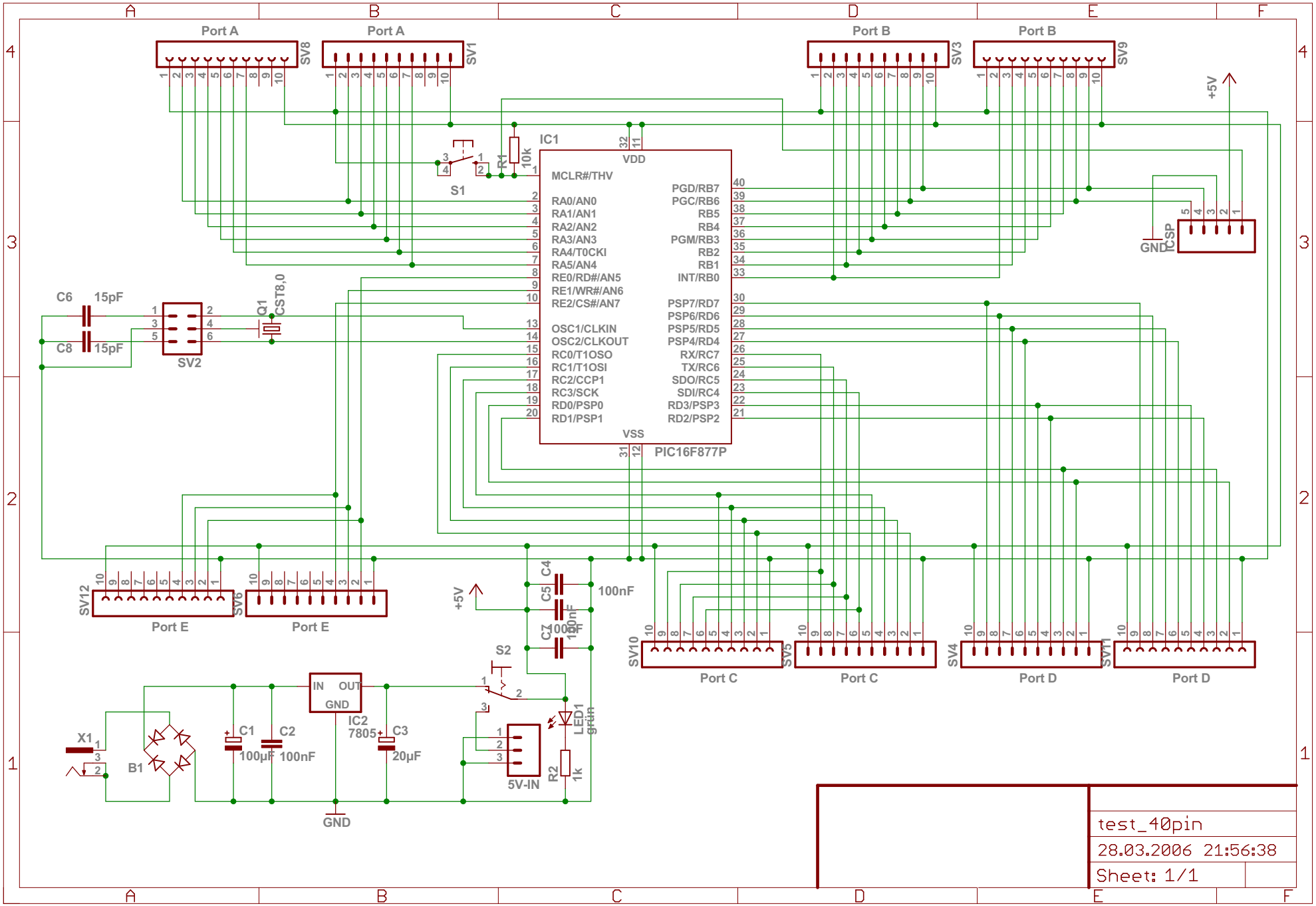
Port A
SV8
Port A
SV1
Port B
SV3
Port B
SV9
+5V
IC1
VDD
MCLR#/THV
RA0/AN0
RA1/AN1
RA2/AN2
RA3/AN3
RA4/T0CKI
RA5/AN4
RE0/RD#/AN5
RE1/WR#/AN6
RE2/CS#/AN7
OSC1/CLKIN
OSC2/CLKOUT
RC0/T1OSO
RC1/T1OSI
RC2/CCP1
RC3/SCK
RD0/PSP0
RD1/PSP1
PGD/RB7
PGC/RB6
RB5
RB4
PGM/RB3
RB2
RB1
INT/RB0
PSP7/RD7
PSP6/RD6
PSP5/RD5
PSP4/RD4
RX/RC7
TX/RC6
SDO/RC5
SDI/RC4
RD3/PSP3
RD2/PSP2
VSS
PIC16F877P
R1
10k
S1
ICSP
GND
C6
15pF
C8
15pF
SV2
Q1
CST8,0
SV12
Port E
SV6
Port E
+5V
C4
C5
C7
100nF
S2
SV10
Port C
SV5
Port C
SV4
Port D
SV11
Port D
IN
OUT
GND
IC2
7805
C1
100µF
C2
100nF
C3
20µF
X1
B1
GND
5V-IN
R2
1k
LED1
grün
test_40pin
28.03.2006 21:56:38
Sheet: 1/1