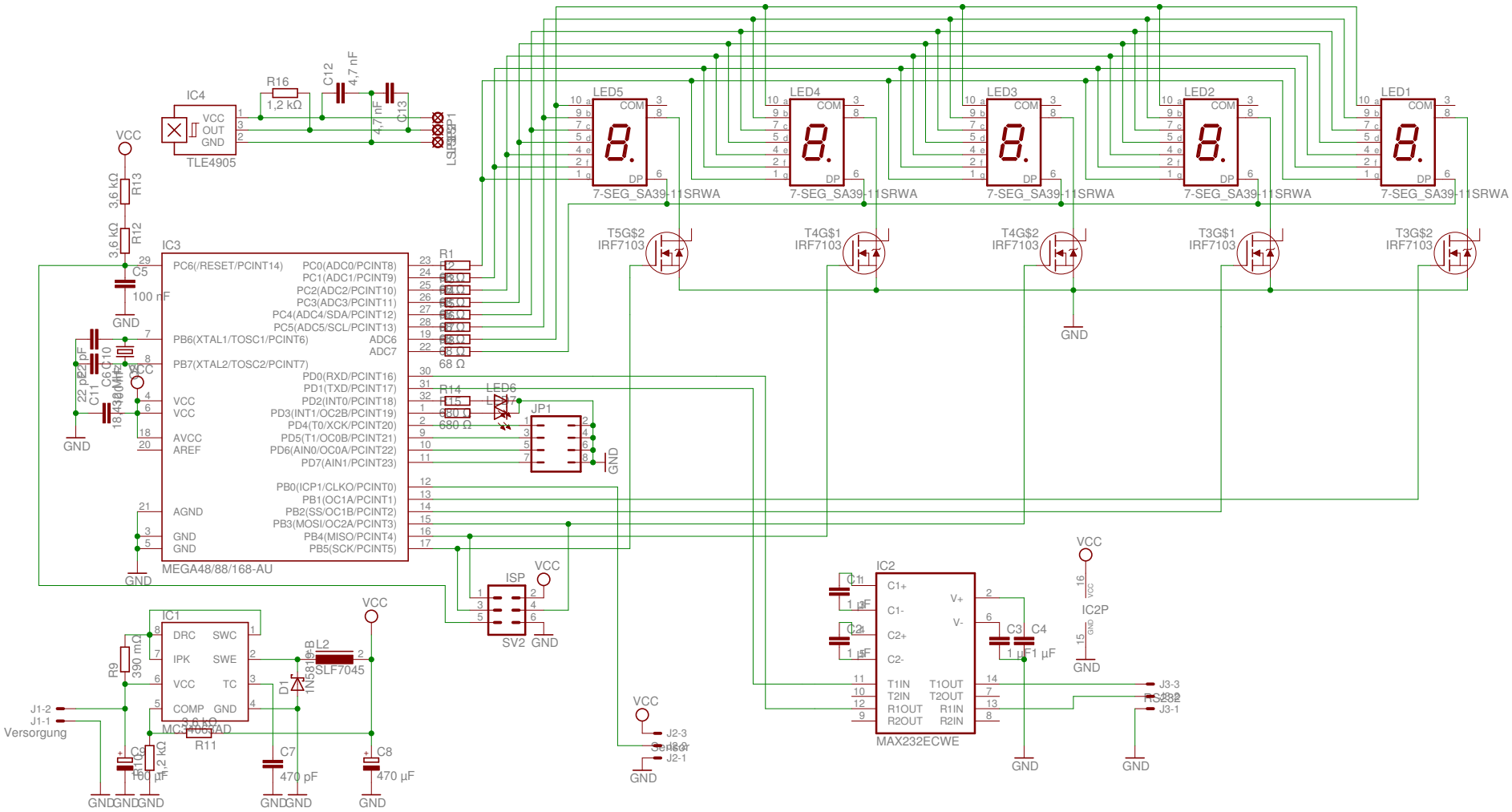
IC4
TLE4905
VCC
OUT
GND
R16
1,2 kΩ
C12
4,7 nF
C13
4,7 nF
LSF1
LSF2
LSF3
LSF4
LSF5
LSF6
LSF7
LSF8
LSF9
LSF10
LSF11
LED5
LED4
LED3
LED2
LED1
COM
DP
7-SEG_SA39-11SRWA
T5G$2
IRF7103
T4G$1
T4G$2
T3G$1
T3G$2
R13
3,6 kΩ
R12
3,6 kΩ
C5
100 nF
IC3
PC6(/RESET/PCINT14)
PC0(ADC0/PCINT8)
PC1(ADC1/PCINT9)
PC2(ADC2/PCINT10)
PC3(ADC3/PCINT11)
PC4(ADC4/SDA/PCINT12)
PC5(ADC5/SCL/PCINT13)
PB6(XTAL1/TOSC1/PCINT6)
ADC6
ADC7
PB7(XTAL2/TOSC2/PCINT7)
PD0(RXD/PCINT16)
PD1(TXD/PCINT17)
PD2(INT0/PCINT18)
PD3(INT1/OC2B/PCINT19)
PD4(T0/XCK/PCINT20)
PD5(T1/OC0B/PCINT21)
PD6(AIN0/OC0A/PCINT22)
PD7(AIN1/PCINT23)
PB0(ICP1/CLKO/PCINT0)
PB1(OC1A/PCINT1)
PB2(SS/OC1B/PCINT2)
PB3(MOSI/OC2A/PCINT3)
PB4(MISO/PCINT4)
PB5(SCK/PCINT5)
VCC
VCC
AVCC
AREF
AGND
GND
GND
MEGA48/88/168-AU
C6
C10
C11
22 pF
22 pF
18,432 MHz
R1
68 Ω
R14
680 Ω
LED6
JP1
ISP
SV2
IC1
DRC
SWC
IPK
SWE
VCC
TC
COMP
GND
MC34067AD
R9
390 mΩ
R11
3,6 kΩ
L2
SLF7045
D1
1N5819
C7
470 pF
C8
470 µF
C9
100 µF
R10
1,2 kΩ
J1-2
J1-1
Versorgung
IC2
C1+
C1-
C2+
C2-
V+
V-
T1IN
T2IN
R1OUT
R2OUT
T1OUT
T2OUT
R1IN
R2IN
MAX232ECWE
C1
C2
C3
C4
1 µF
IC2P
J3-3
J3-2
J3-1
J2-3
J2-2
J2-1
Sensor