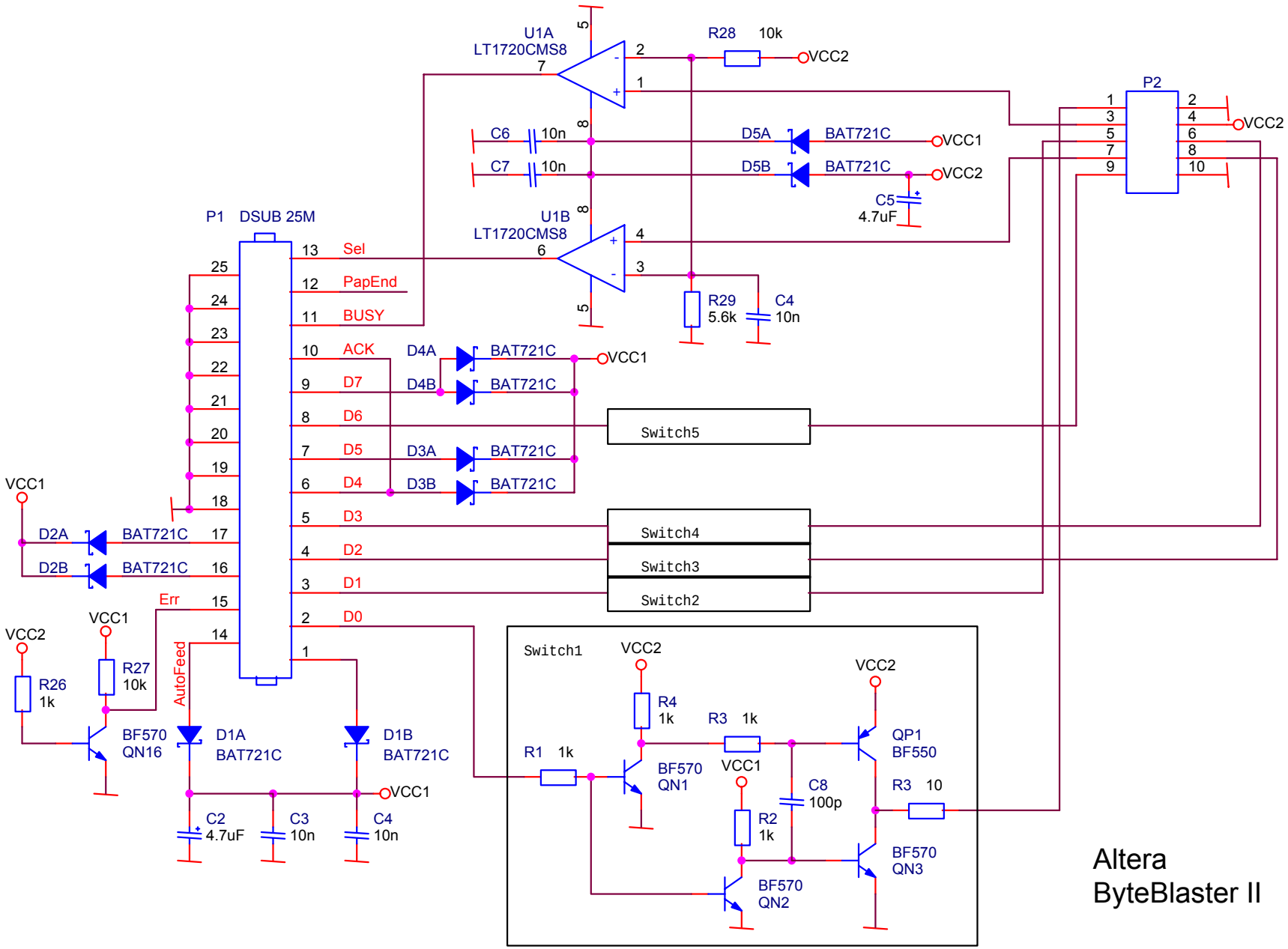
U1A
LT1720CMS8
U1B
LT1720CMS8
R28 10k
VCC2
C6 10n
C7 10n
D5A BAT721C
D5B BAT721C
VCC1
VCC2
C5
4.7uF
R29
5.6k
C4
10n
P1 DSUB 25M
Sel
PapEnd
BUSY
ACK
D7
D6
D5
D4
D3
D2
D1
D0
D4A BAT721C
D4B BAT721C
D3A BAT721C
D3B BAT721C
Switch5
Switch4
Switch3
Switch2
P2
D2A BAT721C
D2B BAT721C
Err
AutoFeed
R26
1k
R27
10k
BF570
QN16
D1A
BAT721C
D1B
BAT721C
C2
4.7uF
C3
10n
C4
10n
Switch1
R4
1k
R3 1k
R1 1k
BF570
QN1
R2
1k
C8
100p
QP1
BF550
R3 10
BF570
QN3
BF570
QN2
Altera
ByteBlaster II