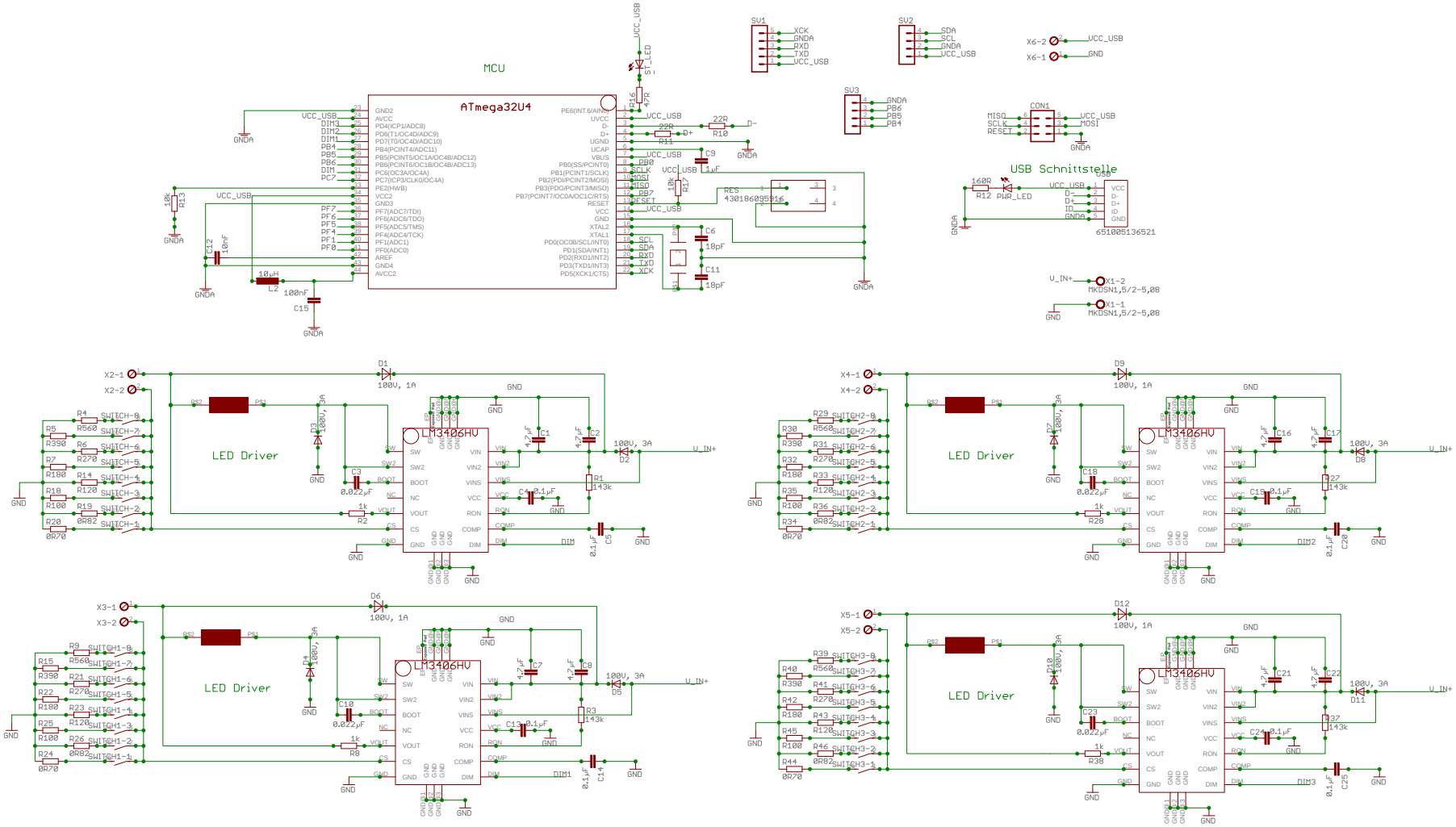
MCU
ATmega32U4
USB Schnittstelle
LED Driver
LM3406HV
SU1
SU2
SV3
CON1
X1-1
X1-2
X2-1
X2-2
X3-1
X3-2
X4-1
X4-2
X5-1
X5-2
V_IN+
GND
GNDA
VCC_USB