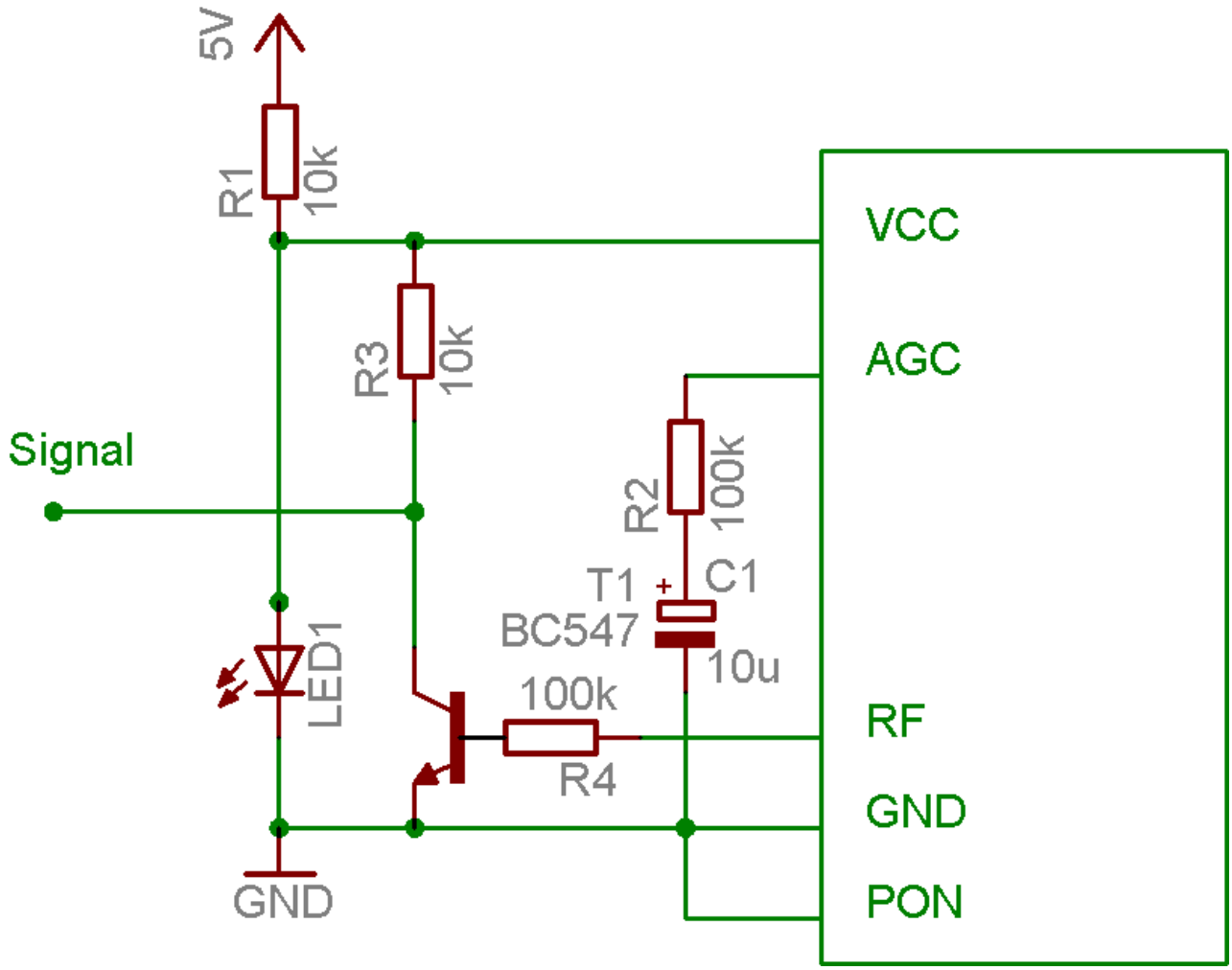
5V
R1
10k
R3
10k
Signal
LED1
GND
R2
100k
T1
C1
BC547
10u
100k
R4
VCC
AGC
RF
GND
PON