20Bit-TWI / I2C -DAC

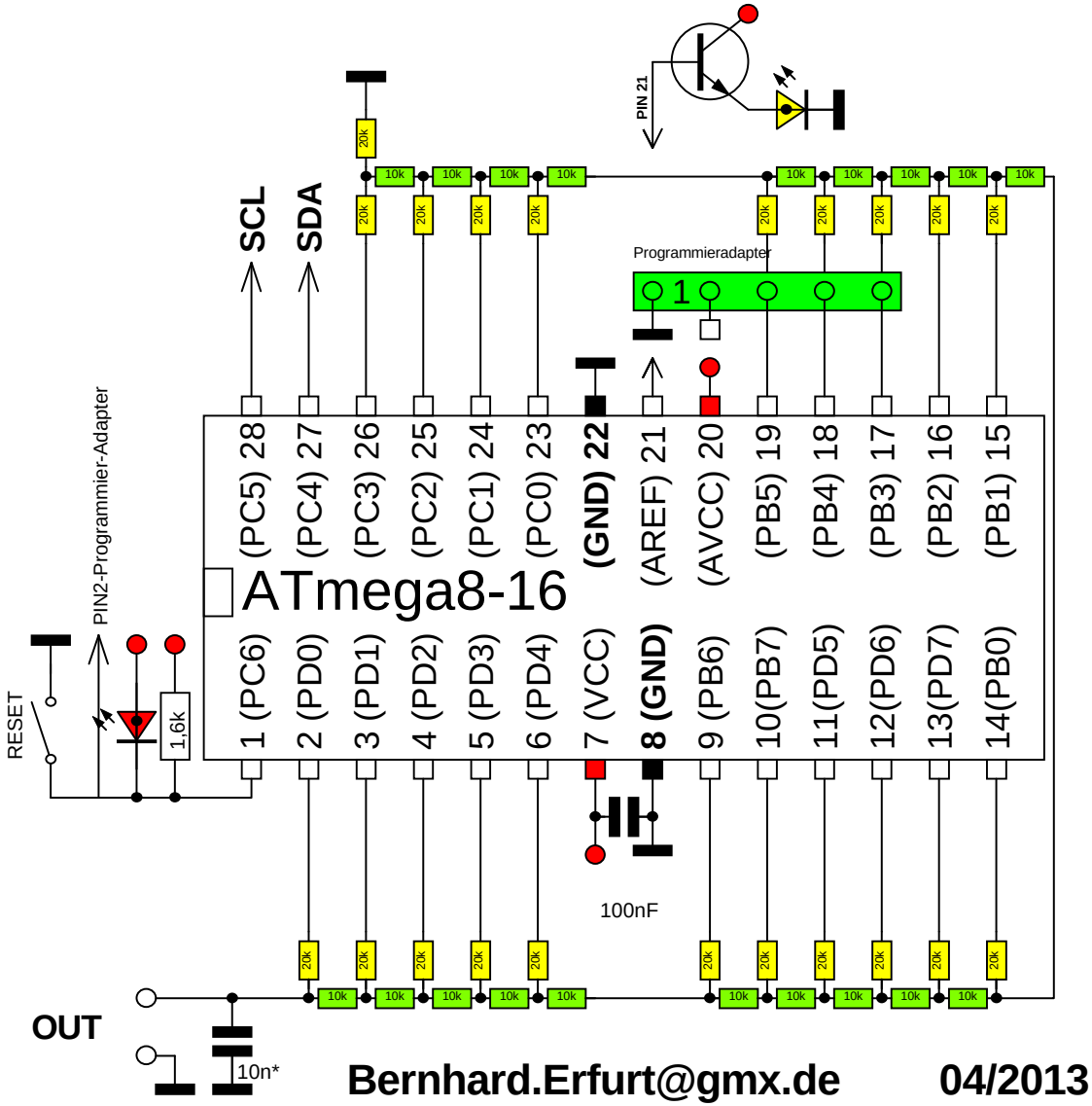

16Bit= 65.536
17Bit= 131.072
18Bit= 262.144
19Bit= 524.288
20Bit=1.048.576

Bernhard.Erfurt@gmx.de **04/2013**